Section L

SECTION L - ENGINEERING DRAWINGS

PRELIMINARY LAYOUT CONCEPT

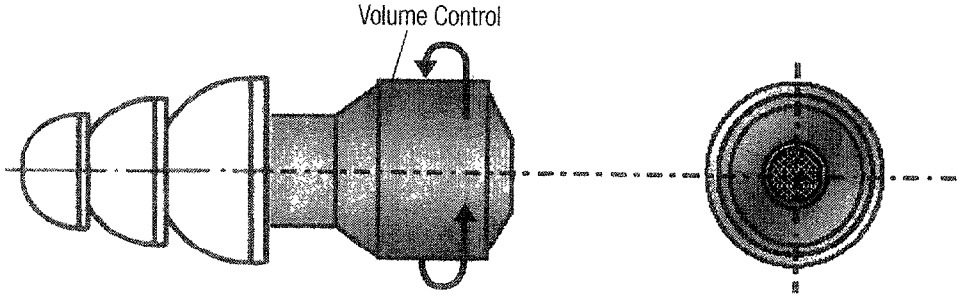

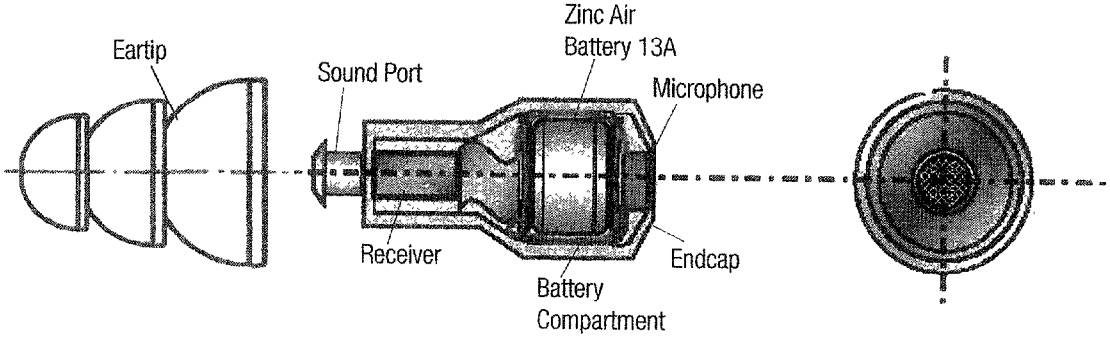

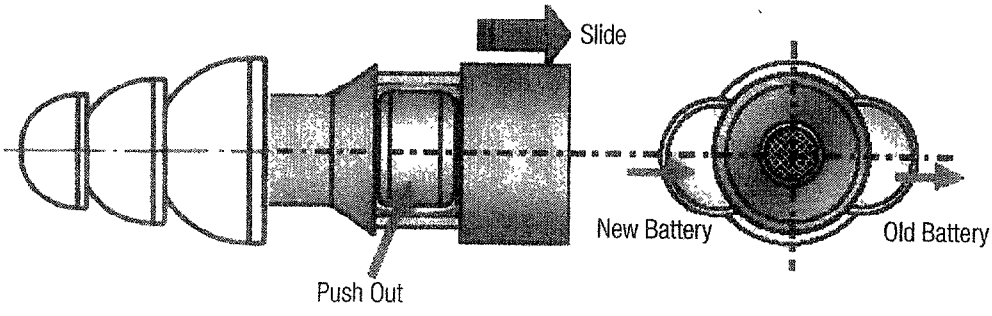

Figure 1 - Page L-2

ARTIST RENDERING OF TV-TIP

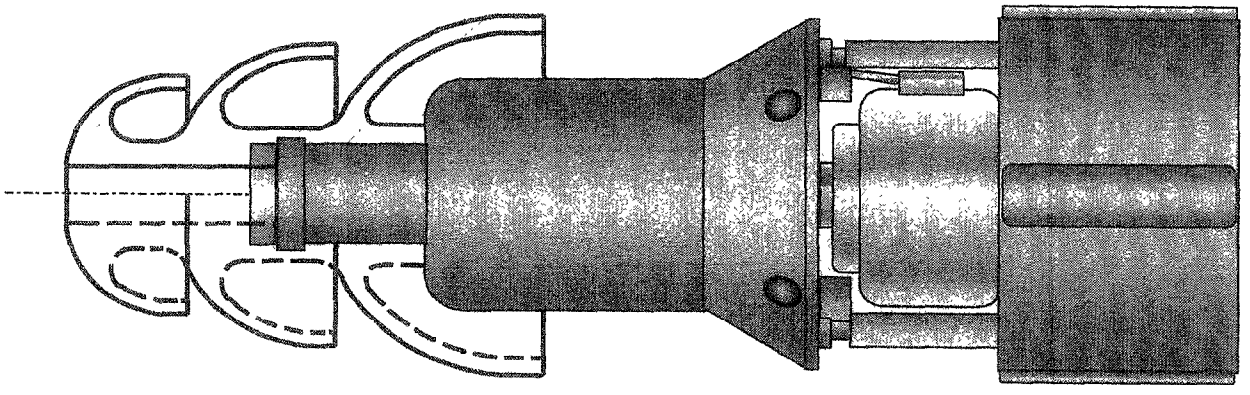

PRELIMINARY CROSS-SECTION ASSEMBLY LAYOUT

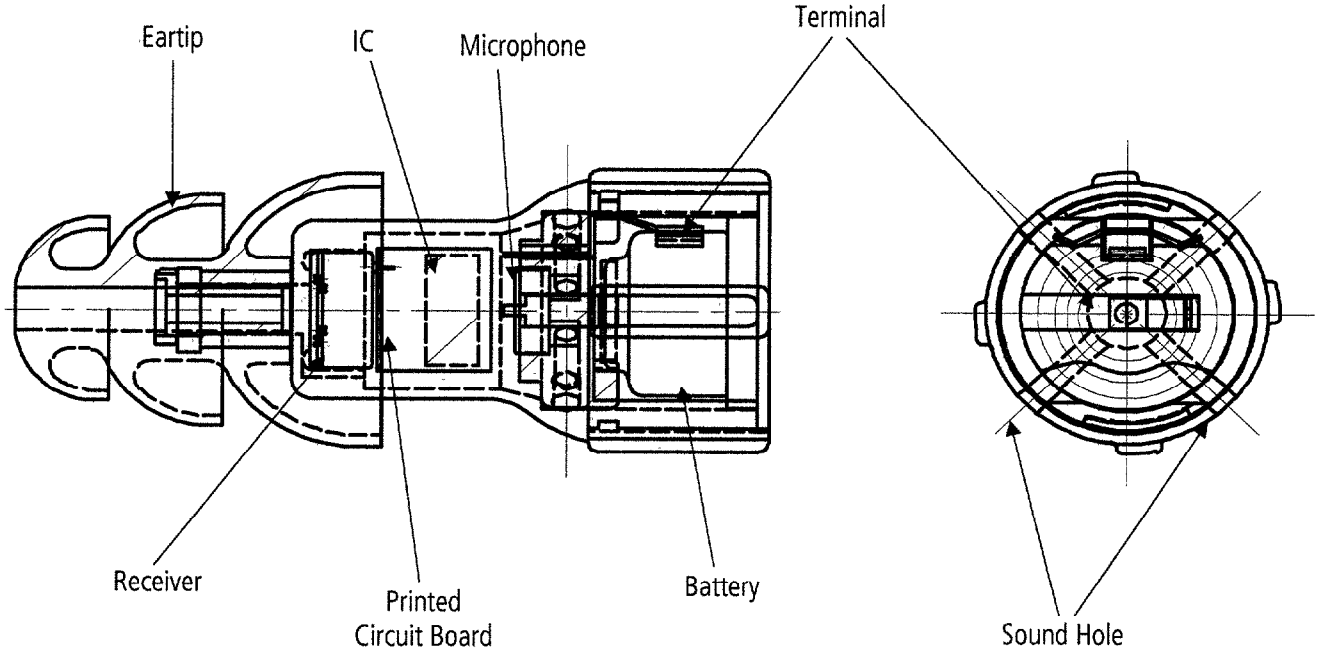
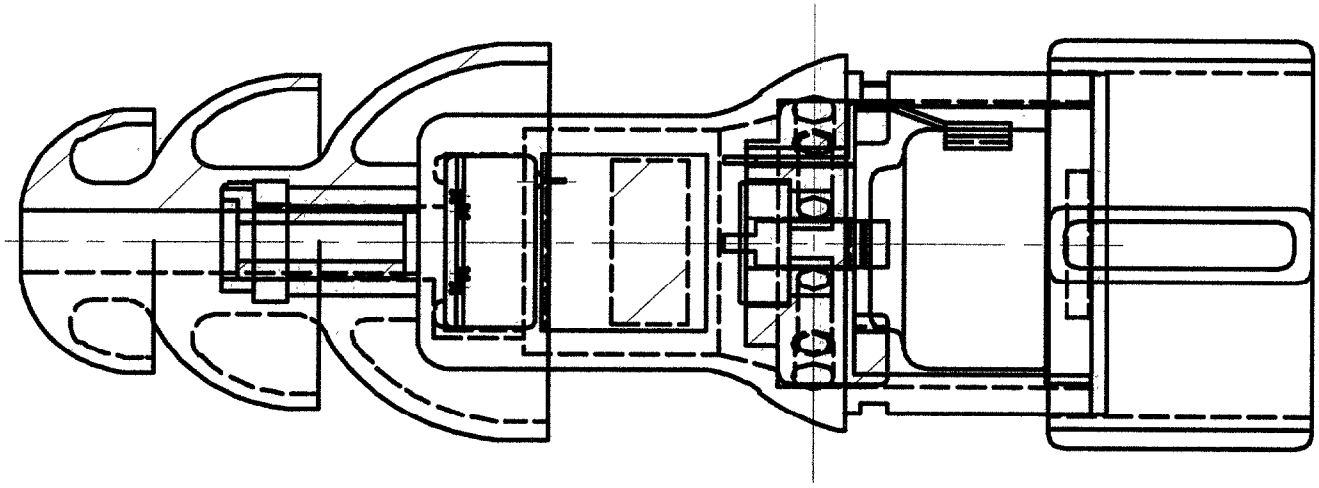
PRELIMINARY CROSS-SECTION OF BATTERY ASSEMBLY STAGE