NORTH AMERICAN STANDARD SUGGESTED INSPECTION PROCEDURE

FHWA-97-2180-64

STEP 1 CHOOSE THE INSPECTION SITE

- SELECT A SAFE LOCATION
  If possible, find a paved, level surface away from traffic. Avoid hills, curves, and construction sites.

  As you approach the vehicle for the first time, look for placards or other signs of hazardous materials. If such cargo is present, always look for leaks or spills.

STEP 2 GREET THE DRIVER

Make initial contact with the driver.

Check for seat belt usage and condition.

Check for possible illegal presence of alcohol or drugs.

Explain the inspection procedure to the driver.

STEP 3 PREPARE THE VEHICLE AND DRIVER

Instruct the driver to remain at the controls.

Have the driver turn the engine off. (Make sure you allow for a cool down period for turbo-charged engines.)

Place chock blocks in position beginning on the driver's side, one in front and one behind the drive axle tires or between the axles.

Advise the driver that the wheels have been chocked.

Have the driver place the transmission in neutral and release all brakes.

Advise the driver in the use of hand signals (Lamps and brakes).

An inspection form or note pad can be used to record violations during the inspection.

STEP 4 CHECK DRIVER'S DOCUMENTS

- COLLECT DOCUMENTS BEFORE INSPECTION
  All documents should be collected from the driver **BEFORE** beginning the vehicle inspection.

  This will prevent the driver from altering the log book while you are under the vehicle, and discourage him/her from leaving the inspection scene until you are finished.
- DRIVER LICENSE
  Expiration date, birth date, status check.
- MEDICAL EXAMINER'S CERTIFICATE
  Expiration date, corrective lenses, hearing aid, signature, waiver.

SUPPLEMENTAL INFORMATION
DOCKET MC-92-4

If a Canadian driver has a valid license, that denotes that he has passed an annual physical exam.

- RECORD OF DUTY STATUS
  Updated to last change of duty status, legible handwriting, today's date, past 7 days recorded, mileage, driving time, on duty time, signature, vehicle numbers, remarks.

  Check for written authorization if using an on-board electronic recording device.

  DRIVER VEHICLE INSPECTION REPORT
  Vehicle I.D., defects, signatures.

STEP 5 CHECK FOR PRESENCE OF HAZARDOUS MATERIALS

- SHIPPING PAPERS/BILL OF LADING
  Check for listings of hazardous materials indicated by the first entry, an "X" in the H.M. column, or a contrasting color. Papers must be within arm's reach and visible.
- PLACARDS
  As mentioned above, check for the presence of placards, but use caution even if none are posted.
- LEAKS, SPILLS, UNSECURE CARGO
  When hazardous materials are present, be ESPECIALLY careful with leaks, spills, or unsecure cargo.
- MARKINGS
  Cargo tanks and portable tanks will display markings on an orange panel or placard. They indicate the I.D. number of the hazardous materials. There are exceptions to this rule.
- LABELS
  When containers are visible, labels will identify the hazardous materials. There are exceptions to this rule.

STEP 6 INSIDE CAB

- STEERING LASH
  Turn the steering wheel in one direction until the tires just begin to pivot.

  Vehicles with power steering may require the engine running to turn the wheel.

  Place a mark on the steering wheel, then hold the marker at that point. Turn the wheel in the other direction until the tires again start to move.

  Measure the distance between the two points. The amount of allowable lash varies with the diameter of the steering wheel.

  Compare that measurement to Out-of-Service Criteria.

  Check steering column for unsecure attachment.

STEP 7 FRONT OF TRACTOR

- HEAD LAMPS, TURN SIGNALS, EMERGENCY FLASHERS
  Check for improper color and operation.
- WINDSHIELD WIPERS
  Check for improper operation.

  Two wipers are required unless one can clean the driver's field of vision.
- WINDSHIELD
  Check for cracks or other damage.

  Check for decals or stickers in field of vision.

STEP 8 STEERING AXLE

INFORM THE DRIVER THAT YOU ARE GOING UNDER THE VEHICLE, AND TO LISTEN FOR YOUR INSTRUCTIONS.

- STEERING SYSTEM (BOTH SIDES)
  Check for loose, worn, bent, damaged or missing parts.

  Instruct the driver to rock the steering wheel, and check key components: front axle beam, gear box, pitman arm, drag link, tie rod, tie rod ends.

- FRONT SUSPENSION (BOTH SIDES)
  Check for indications of misaligned, shifted, or cracked springs, loosened shackles, missing bolts, spring hangers unsecure at frame, and cracked or loose U-bolts.

  Any unsecure axle positioning parts, and signs of axle misalignment.

- FRONT BRAKES (BOTH SIDES)
  Check for missing, nonfunctioning, loose, contaminated, or cracked parts on the brake system, such as brake drum, shoes, rotors, pads, linings, brake chamber, chamber mounting, push rods and slack adjusters.

  Check for "S" cam flip-over.

  Be alert for audible air leaks around brake components and lines.

  With the brakes released, mark the brake chamber push rod at a point where the push rod exits the brake chamber. Mark the push rods on both sides at this time; all push rods will be measured in STEP 21.

- FRONT AXLE
  Check for cracks, welds, and obvious misalignment.

- FRAME and FRAME ASSEMBLY
  Check for cracks, or any defect that may lead to the collapse of the frame.

STEP 9 LEFT FRONT SIDE OF TRACTOR

- LEFT FRONT WHEEL AND RIM
  Check for cracks, unseated locking rings, broken or missing lugs, studs or clamps. Bent or cracked rims. Check for "bleeding" rust stains.

  Check for loose or damaged lug nuts and elongated stud holes.

- LEFT FRONT TIRE
  Check for improper inflation, serious cuts, bulges.

  Check tread wear and measure major tread groove depth.

  Inspect sidewall for defects.

  Check for exposed fabric or cord.

  Radial and bias tires should not be mixed on the steering axle.

STEP 10 LEFT SADDLE TANK AREA

- LEFT FUEL TANK(S)
  Check for unsecure mounting, leaks or other damage. Verify that the fuel crossover line is secure. Check for unsecure cap(s).

  Check ground below tank for signs of leaking fuel.

- TRACTOR FRAME
  Check frame rails and crossmembers on the tractor just behind the cab, looking for cracks, bends, or excessive corrosion.

- EXHAUST SYSTEM
  Check for unsecure mounting, leaks (under the cab), exhaust contacted by fuel or air lines or electrical wires.

  Check for carbon deposits around seams and clamps.

STEP 11 TRAILER FRONT

- AIR AND ELECTRICAL LINES
  Lines between tractor and trailer should be suspended and free of tangles and crimps.

  They should have sufficient slack to allow the vehicle to turn.

  Inspect line connections for proper seating.

  Listen for audible air leaks.
- FRONT END PROTECTION
  Check for height requirements.

  There are many exceptions to the front end protection regulation; be able to recognize these.

STEP 12 LEFT REAR TRACTOR AREA

- WHEELS, RIMS, & TIRES
  Inspect as described in STEP 9.

  Check inside tire of dual for inflation and general condition.

  Tires should be evenly matched (same circumference) on dual wheels.

  Without placing yourself between the tires on tandem axles, check for debris between the tires.

  Check for duals touching one another.
- LOWER FIFTH WHEEL
  Check for unsecure mounting to the frame or any missing or damaged parts.

  Check for any visible space between the upper and lower fifth wheel plates.

  Verify that the locking jaws are around the shank and not the head of the kingpin. Verify that the release lever is seated properly, and that the safety latch is engaged.
- UPPER FIFTH WHEEL
  Check for any damage to the weight bearing plate (and its supports) on the trailer. Check kingpin condition.
- SLIDING FIFTH WHEEL
  Check for proper engagement of locking mechanism (teeth fully engaged on rail). Check for worn or missing parts, making sure that the position does not allow the tractor frame rails to contact the landing gear during turns.

INFORM THE DRIVER THAT YOU ARE GOING UNDER THE VEHICLE. ENTER THE UNDERCARRIAGE IN VIEW OF THE DRIVER.

- SUSPENSION (BOTH SIDES)
  Inspect as described in STEP 8.

  Check for deflated or leaking air suspension systems.
- BRAKES (BOTH SIDES)
  Inspect brakes as described in STEP 8.

  With brakes released, mark the push rods.

STEP 13 LEFT SIDE OF TRAILER

- FRAME AND BODY
  Check for corrosion fatigue, crossmembers missing, cracks, body parts missing or defective.
- CARGO SECUREMENT
  Check for improper blocking or bracing, and unsecure chains or straps. Verify end gates are secured in stake pockets. Check tarp or canvas.

STEP 14 LEFT REAR TRAILER WHEELS

- WHEELS, RIMS, & TIRES
  Inspect as described in STEP 9.
- SLIDING TANDEM
  Check for misalignment and position. Look for damaged, worn, or missing parts. Check locking mechanism; teeth of locking mechanism must fully mesh with those of the rail secured to the frame.

INFORM THE DRIVER THAT YOU ARE GOING UNDER THE VEHICLE. ENTER THE UNDERCARRIAGE IN VIEW OF THE DRIVER.

- SUSPENSION (BOTH SIDES)
  Inspect as described in STEP 8.
- BRAKES (BOTH SIDES)
  Inspect as described in STEP 8.

  With brakes released, mark push rods.

STEP 15 REAR OF TRAILER

- TAIL, STOP, & TURN LAMPS, & EMERGENCY FLASHERS
  Check for improper color and operation. This will require the use of the hand signals explained to the driver earlier.
- CARGO SECUREMENT
  Inspect as described in STEP 13.

  Also check tailboard security. Verify end gates are secured in stake pockets.

  Check both sides of trailer to insure protection of cargo from shifting or falling.

  Verify that rear doors are securely closed.

STEP 16 RIGHT REAR TRAILER WHEELS

- WHEELS, RIMS, & TIRES
  Inspect as described in STEP 9.
- SLIDING TANDEM
  Inspect as described in STEP 14.

STEP 17 RIGHT SIDE OF TRAILER

- FRAME & BODY
  Inspect as described in STEP 13.
- CARGO SECUREMENT
  Inspect as described in STEP 13.
- SPARE TIRES
  Check for unsecure mounting.

STEP 18 RIGHT REAR TRACTOR AREA

- WHEELS, RIMS, & TIRES
  Inspect as described in STEP 9.
- UPPER, LOWER, SLIDING FIFTH WHEEL
  Inspect as described in STEP 12.

STEP 19 RIGHT SADDLE TANK AREA

- RIGHT FUEL TANK(S)
  Inspect as described in STEP 10.
- TRACTOR FRAME
  Inspect as described in STEP 10.
- EXHAUST SYSTEM
  Inspect as described in STEP 10.

STEP 20 RIGHT FRONT SIDE OF TRACTOR

- WHEELS, RIMS, & TIRES
  Inspect as described in STEP 9.

STEP 21 BRAKE ADJUSTMENT CHECK

- INSTRUCT THE DRIVER
  Proceed to the driver's door, and have driver apply service system brakes and hold in the applied position.

INFORM THE DRIVER THAT YOU ARE GOING
UNDER THE VEHICLE. ENTER THE UNDERCARRIAGE
IN VIEW OF THE DRIVER.

- MEASURE PUSH ROD TRAVEL (ALL BRAKES)
  While the brakes are applied, move around the vehicle and measure the distance of push rod travel at each chamber.

  Again, listen for leaks as you move around the vehicle.

  Write down each push rod measurement, and compare them to the Out-of-Service Criteria for the appropriate size and type of brake chamber.

STEP 22 FIFTH WHEEL MOVEMENT CHECK

- USE CAUTION
  If conducted improperly, this method of checking for fifth wheel movement can result in serious damage to the vehicle. Use caution and instruct the driver carefully.
- PREPARE THE VEHICLE AND DRIVER
  Have the driver put the vehicle in gear, release the service brakes, and apply the trailer brakes.

  Remove the wheel chocks and have the driver start the vehicle.

  Carefully explain the procedure to the driver. Tell him/her to GENTLY rock the tractor as you watch the fifth wheel.
- CONDUCT THE PROCEDURE
  As the tractor rocks, watch for movement between the mounting components and frame, pivot pin, and bracket, and the upper and lower fifth wheel halves.

STEP 23 AIR LOSS RATE

- WHEN TO CONDUCT THE TEST
  If you heard an air leak at any point in the inspection, you should now check the vehicle's air loss rate.

- CONDUCT THE PROCEDURE
  Have the driver run the engine at idle, then apply and hold the service brake.

  Observe the air reservoir pressure gauge on the dash. Have the driver pump the pressure down to 80 psi. Compressors do not activate until system pressure drops below a certain level. At about 80 lbs. most compressors should be operating.

  Air pressure should be maintained or increased. A drop in pressure indicates a serious air leak in the brake system, and the vehicle should be placed out of service.

STEP 24 LOW AIR PRESSURE WARNING DEVICE

- TEST THE WARNING DEVICE
  The ignition must be in the "on" position for this test.

  Instruct the driver to deplete the air supply by pumping the foot valve until the low air pressure warning device activates.

  Observe the gauges on the dash. The low air pressure warning must activate at a minimum of 1/2 the compressor governor cut out pressure, i.e. normally 55 psi or above.

STEP 25 TRACTOR PROTECTION VALVE

This procedure will test both the tractor protection valve and the trailer emergency brakes.

- CONDUCT THE TEST
  Instruct the driver to release the emergency brakes by pushing in the dash valves.

  Break the supply emergency line at the hose couplers between the tractor and the trailer. When the line is disconnected, a blast of air will be noticed. At this point, the emergency brakes on the trailer should set up.

- OBSERVE THE DASH GAUGE
  Air will leak from the tractor side of the line until the pressure in the tractor's system drops to the 20–45 psi range. At that point, the air loss should stop, isolating the tractor air system.

  A loss of air in the tractor system below the 20–45 psi range indicates a malfunctioning tractor protection valve. If the trailer brakes do not set up when the line is disconnected, there is a problem with the trailer emergency brakes.

STEP 26 COMPLETE THE INSPECTION

- COMPLETE PAPER WORK
  Complete inspection forms and other paperwork, as required.

- CONCLUDE WITH THE DRIVER
  Explain any violations to the driver. Take appropriate enforcement action, if necessary.

- OUT-OF-SERVICE PROCEDURES
  Follow the appropriate procedures when placing a driver or vehicle out of service.

- APPLY C.V.S.A. DECAL
  If the vehicle(s) passed the inspection, apply the C.V.S.A. decal(s) as follows:

  Power unit - lower right corner of exterior surface of the passenger's windshield.

  Trailers - lower right corner as near the front as possible.

  Buses - right front cornerpost of the bus body directly below the right rear view mirror.

NORTH AMERICAN STANDARD INSPECTION PROCEDURE

1. **PREPARE THE VEHICLE AND DRIVER**
   Instruct the driver to remain at the controls, and turn the engine off. (Allow cool down time for turbo-charged engines.)
   [illegible] check blocks in position beginning on the driver's [illegible] and one behind the drive axle tires or [illegible] wheels, and advise the driver that the wheels have been chocked.
   Have the driver place the transmission in neutral and release all brakes.
   Advise the driver in the use of hand signals. (Lamps and brakes)
2. **CHECK DRIVER'S REQUIREMENTS**
   - DRIVER LICENSE (391.11)
     Check for expiration date, birth date, status check.
   - MEDICAL CERTIFICATE (391.41)
     Check for expiration date, corrective lenses, hearing aid, signature. Canadian driver license serves as medical certificate
   - MEDICAL WAIVER (if applicable) (391.49)
     Check for expiration date, and make sure form is completed. Note the stated physical limitations.
   - RECORD OF DUTY STATUS (395.8) (395.3)
     Updated to last change of duty status, today's date, legible handwriting, past 7 days recorded, mileage, driving time, on duty time, vehicle numbers, carrier name, signature.
     "Remarks" section may include locations of duty status change, unusual circumstances that delay the trip, and shipping document numbers or the name of the shipper.
     Check for written authorization for manualive electronic recording devices, if applicable
   - DRIVER VEHICLE INSPECTION REPORT (396.11)
     Check for I.D. number of vehicle(s) inspected, record of defects found (if any), and signature.
   - SHIPPING PAPERS/BILL OF LADING
     Check for listings of hazardous materials indicated by the first entry an "X" in the H.M. column or a corresponding code. Papers must be within arm's reach and visible.
     SEAT BELT (392.16)
     Check for condition and usage
   - ALCOHOL AND DRUGS (392.4) (392.5)
     Check for violations
3. **CHECK FOR PRESENCE OF HAZARDOUS MATERIALS**
   - PLACARDS
     Check for the presence of placards, but use caution even if none are posted
   - LEAKS, SPILLS, UNSECURE CARGO
     When hazardous materials are present, be ESPECIALLY careful with leaks, spills, or unsecure cargo
   - MARKINGS
     Cargo tanks and portable tanks will display markings on an orange panel or placard. They indicate the I.D. number for the hazardous materials. There are exceptions to this rule
   - LABELS
     When containers are visible, labels will identify the hazardous materials. There are exceptions to this rule.
4. **INSIDE CAB**
   - STEERING LASH
     Measure amount of steering lash and compare with Out-of-Service Criteria.
   - STEERING COLUMN
     Check for unsecure attachment.
5. **FRONT OF TRACTOR**
   - HEAD LAMPS, TURN SIGNALS, EMERGENCY FLASHERS (393.29)
     Check for improper color and operation
   - WINDSHIELD WIPERS (393.78)
     Check for improper operation. Two wipers are required unless one can clean the driver's field of vision
   - WINDSHIELD (393.60)
     Check for cracks or other damage. Check for decals or stickers in field of vision
6. **STEERING AXLE**

   INFORM THE DRIVER THAT YOU ARE GOING UNDER THE VEHICLE, AND TO LISTEN FOR YOUR INSTRUCTIONS.

   - STEERING SYSTEM (BOTH SIDES)
     Check for loose, worn, bent, damaged or missing parts. Instruct the driver to rock the steering wheel, and check key components, front axle beam, gear box, pitman arm, drag link, tie rod, tie rod ends.
   - FRONT SUSPENSION (BOTH SIDES)
     Check for indications of misaligned, shifted, or cracked springs, loosened shackles, missing bolts, spring hangers unsecure at frame, and cracked or loose U-bolts.
     Also check for unsecure axle positioning parts and signs of axle misalignment.

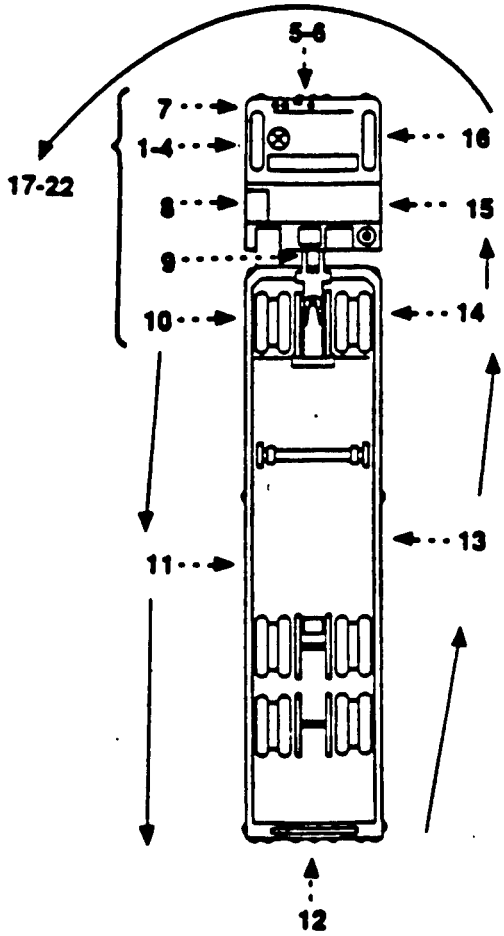

   - FRONT BRAKES (BOTH SIDES) (393.48)
     Check for missing, nonfunctioning, loose, contaminated, or cracked parts on the brake system, such as brake drum, shoes, rotors, pads, linings, brake chambers, chamber mounting, push rods, slack adjusters.
     Check for "S" cam flip over. Be alert for audible air leaks around brake components and lines.
     With the brakes released, mark the brake chamber push rod at a point where the push rod exits the brake chamber. Mark the push rods on both sides at this time; all push rods will be measured in ITEM 18.
   - FRONT AXLE
     Check for cracks, welds, and obvious misalignment.
   - FRAME and FRAME ASSEMBLY
     Check for cracks, or any defect that may lead to the collapse of the frame.
7. **LEFT FRONT SIDE OF TRACTOR**
   - LEFT FRONT WHEEL & RIM
     Check for cracks, unseated locking rings, broken or missing lugs, studs or clamps. Bent or cracked rims, "bleeding" rust stains, loose or damaged lug nuts and elongated stud holes.
   - LEFT FRONT TIRE (393.75)
     Check for improper inflation, serious cuts, bulges. Check tread wear and measure major tread groove depth. Inspect sidewall for defects. Check for exposed fabric or cord. Radial and bias tires should not be mixed on the steering axle
8. **LEFT SADDLE TANK AREA**
   - LEFT FUEL TANK(S) (393.65)
     Check for unsecure mounting, leaks or other damage. Verify that the fuel crossover line is secure. Check for unsecure cables
     Check ground below tank for signs of leaking fuel
   - TRACTOR FRAME (393.201)
     Check frame rails and cross members on the tractor just behind the cab, looking for cracks, bends, or excessive corrosion
   - EXHAUST SYSTEM (393.83)
     Check for unsecure mounting, leaks (under the cab), exhaust contacted by fuel or air lines or electrical wires
     Check for carbon deposits around seams and clamps
9. **TRAILER FRONT**
   - AIR & ELECTRICAL LINES (393.28)
     Lines between tractor and trailer should be suspended and free of tangles and crimps. They should have sufficient slack to allow the vehicle to turn. Inspect the connections for proper seating. Listen for audible air leaks
   - FRONT END PROTECTION (393.108)
     Check for height requirements. (Note exceptions.)
10. **LEFT REAR TRACTOR AREA**
    - WHEELS, RIMS & TIRES
      Inspect as described in ITEM 7
      Check inside tire of dual for inflation and general condition. Tires should be evenly matched (same circumference) on dual wheels.
      Without passing yourself between the tires on tandem axles, check for debris between the tires.
    - LOWER FIFTH WHEEL (393.70)
      Check for unsecure mounting to the frame or any missing or damaged parts.
      Check for any visible space between the upper and lower fifth wheel plates.
      Verify that the locking jaws are around the shank and not the head of the kingpin. Verify that the release lever is seated properly, and that the safety latch is engaged.
    - UPPER FIFTH WHEEL
      Check for any damage to the weight bearing plate and its supports on the trailer. Check kingpin condition
    - SLIDING FIFTH WHEEL
      Check for proper engagement of locking mechanism (latch fully engaged on rail). Check for worn or missing parts, making sure that the position does not allow the tractor frame rails to contact the landing gear during turns.

    INFORM THE DRIVER THAT YOU ARE GOING UNDER THE VEHICLE. ENTER THE UNDERCARRIAGE IN VIEW OF THE DRIVER.

    - SUSPENSION (BOTH SIDES)
      Inspect as described in ITEM 6. Check for deflated or leaking air suspension systems.
    - BRAKES (BOTH SIDES)
      Inspect brakes as described in ITEM 6
      With brakes released, mark the push rods.
11. **LEFT SIDE OF TRAILER**
    - FRAME AND BODY
      Check for cracks and any indication leading to collapse of the frame.
    - CARGO SECUREMENT (393.100)
      Check for improper blocking or bracing, and unsecure chains or straps. Verify end gates are secured in stake pockets. Check tarp or clamps.
    - WHEELS, RIMS, & TIRES
      Inspect as described in ITEM 7
    - SLIDING TANDEM
      Check for misalignment and position. Look for damaged, worn, or missing parts. Check locking mechanism: latch of locking mechanism must fully mesh with those of the rail secured to the frame.

    INFORM THE DRIVER THAT YOU ARE GOING UNDER THE VEHICLE. ENTER THE UNDERCARRIAGE IN VIEW OF THE DRIVER.

    - SUSPENSION (BOTH SIDES)
      Inspect as described in ITEM 6
    - BRAKES (BOTH SIDES)
      Inspect as described in ITEM 6. With brakes released, mark push rods.
12. **REAR OF TRAILER**
    - TAIL, STOP & TURN LAMPS & EMERGENCY FLASHERS
      Check for improper color and operation
    - CARGO SECUREMENT
      Inspect as described in ITEM 11
      Also check tailboard security. Verify end gates are secured in stake pockets, and rear doors are closed. Check both sides of trailer to insure protection of cargo from shifting or falling
13. **RIGHT SIDE OF TRAILER**
    - CHECK ALL ITEMS AS ON LEFT SIDE
14. **RIGHT REAR TRACTOR AREA**
    - CHECK ALL ITEMS AS ON LEFT SIDE
15. **RIGHT SADDLE TANK AREA**
    - CHECK ALL ITEMS AS ON LEFT SIDE
16. **RIGHT FRONT SIDE OF TRACTOR**
    - CHECK ALL ITEMS AS ON LEFT SIDE

17. **BRAKE ADJUSTMENT CHECK**

INFORM THE DRIVER THAT YOU ARE GOING UNDER THE VEHICLE. ENTER THE UNDERCARRIAGE IN VIEW OF THE DRIVER.

- MEASURE PUSH ROD TRAVEL (ALL BRAKES)
  While the brakes are applied, move around the vehicle and measure the distance of push rod travel at each chamber.
  Write down each push rod measurement, and compare them to the Out-of-Service Criteria for the appropriate size and type of brake chamber.
  Again, watch for leaks as you move around the vehicle.

18. **FIFTH WHEEL MOVEMENT CHECK**

- USE CAUTION
  If conducted improperly, this method of checking for fifth wheel movement can result in serious damage to the vehicle. Use caution and instruct the driver carefully.
- PREPARE THE VEHICLE AND DRIVER
  Have the driver put the vehicle in gear, release the service brakes, and apply the trailer brakes.
  Remove the wheel chocks and have the driver start the vehicle. Carefully explain the procedure to the driver. Tell the driver to GENTLY rock the tractor as you watch the fifth wheel.
- CONDUCT THE PROCEDURE
  As the tractor rocks, watch for movement between the mounting components and frame, pivot pin, and bracket, and the upper and lower fifth wheel halves.

19. **AIR LOSS RATE**

- WHEN TO CONDUCT THE TEST
  If you heard an air leak at any point in the inspection, you should now check the vehicle's air loss rate.
- CONDUCT THE PROCEDURE
  Have the driver run the engine at idle, then apply and hold the service brake.
  Observe the air reservoir pressure gauge on the dash. Have driver pump the pressure down to 60 psi. Compressors do not activate until system pressure drops below a certain level. At about 60 lbs, most compressors should be operating.

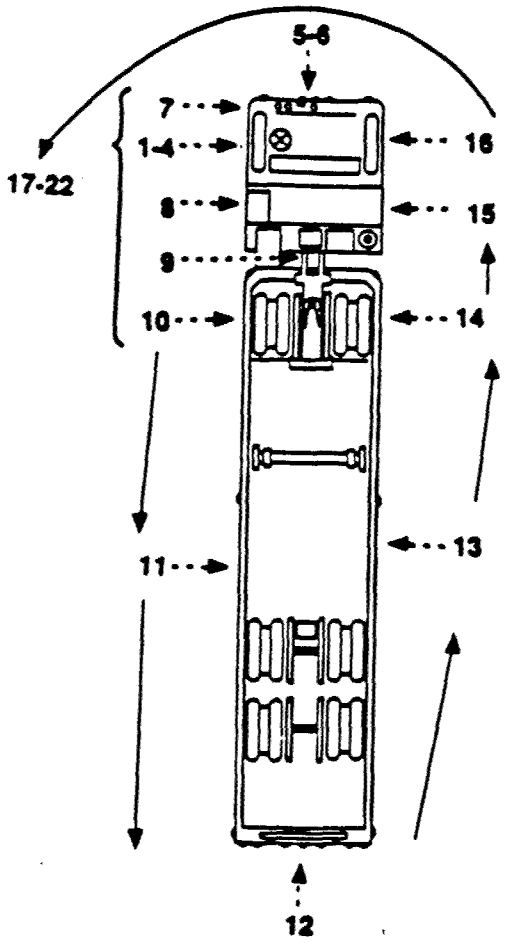

Air pressure should be maintained or increase. A drop in pressure indicates a serious air leak in the brake system and the vehicle should be placed out of service.

20. **LOW AIR PRESSURE WARNING DEVICE**

- TEST THE WARNING DEVICE
  Instruct the driver to pump the air down until the low air pressure warning device activates.
  Observe the gauges on the dash. The low air pressure warning must activate at a minimum of 1/2 the compressor governor cut out pressure, approximately 55 psi.

21. **TRACTOR PROTECTION VALVE**

  This procedure will test both the tractor protection valve and the trailer emergency brakes.

- CONDUCT THE TEST
  Instruct the driver to release the emergency brakes by pushing in the dash valves.
  Break the supply emergency line at the hose couplers between the tractor and the trailer. When the line is disconnected, a blast of air will be noticed. At this point, the emergency brakes on the trailer should set up.
- OBSERVE THE DASH GAUGE
  Air will leak from the tractor side of the line until the pressure in the tractor's system drops to the 20-45 psi range. At this point, the air loss should stop, isolating the tractor air system.
  A loss of air in the tractor system below the 20-45 psi range indicates a malfunctioning tractor protection valve. If the trailer brakes do not set up when the line is disconnected, there is a problem with the trailer emergency brakes.

22. **COMPLETE THE INSPECTION**

- COMPLETE PAPER WORK
  Complete inspection forms and other paperwork, as required.
- CONCLUDE WITH THE DRIVER
  Explain any violations or warnings to the driver, appropriate enforcement action, if necessary.
- APPLY C.V.S.A. DECAL
  Apply a C.V.S.A. decal on all vehicles that qualif

October 3, 1985

RECOMMENDED

CVSA DRIVER/VEHICLE EXAMINATION PROCEDURE (one inspector)

Safety Notes:

1. Never go underneath a vehicle(s) with the engine running.

2. Always use chock blocks to prevent a vehicle(s) from moving.

3. The inspector should not be positioned in extremely dangerous positions (i.e., between tandem axles) when checking tires, inside wheels, and suspension components, or between front fender well and front tire when checking steering components.

4. Always inform the driver when you are going underneath the vehicle(s).

5. Always enter and exit vehicle undercarriage in view of the driver (driver's side).

A. Park vehicle. Place chock blocks in position on the driver's side, one in front and one behind the drive axle tires or between axles.

B. Approach driver, identify yourself, and if requested, display credentials.

C. After establishing jurisdiction by appropriate inquiries, observe if:

1. Vehicle is equipped with safety belt assembly.

2. Driver was using safety belt.

D. Instruct the driver to:

1. Secure the engine; place transmission in neutral; release all brakes; and inform the driver that the wheels are chocked.

Then obtain from the driver the following:

1. Hours of Service Record, operator's license, medical certificate, and driver's vehicle inspection report.

2. Shipping papers, charter order, or trip manifest, etc.

3. If vehicle is transporting Class A or B explosives, obtain:

(a) Copy of rules as required in FMCSR Section 397.19; and

(b) Route plan.

4. If a foreign vehicle, when applicable, ask for proof of financial responsibility (Form MCS-90 or MCS-82).

E. Complete administrative items on inspection form, where applicable.

F. Return all documents to driver.

G. Advise the driver to turn ignition switch to on, turn on the headlights (if during period lighted lamps are required), and remain at the vehicle(s)' controls.

H. Begin mechanical inspection at driver's door:

1. While still at the cab, either rock the steering wheel or ask the driver to rock it while observing the steering wheel lash/play and check column for secure attachment. (NOTE: If serious problem noted in lash/play, have driver restart engine after placing transmission in neutral and recheck lash/play per O/S criteria.)

I. At front of vehicle check:

1. Operation of windshield wipers (during inclement weather).

2. Head lamps, if during period lighted lamps are required.

3. Turn signals.

4. Examine for presence of hazardous material placards on front of power unit/trailer, if applicable.

5. Remove expired CVSA decal, if applicable.

J. Move to a position near or underneath front of power unit and examine:

1. Steering components while driver is rocking steering wheel.

2. Front suspension assembly.

3. Brakes, components, and mark push rod.

4. Frame and frame assemblies.

K. Moving counterclockwise around the vehicle, examine:

1. Left front steering wheel, rim, fastners, and tire.

2. Fuel tank and lines.

3. Connecting air hoses and tubing.

4. Coupling device and components.

5. Drive axle wheels, rims, fasteners, and tires. (NOTE: check undercarriage components both left and right sides.)

6. Drive axle brake component:

   (a) brake drums (hot, cold);

   (b) air leaks (audible);

   (c) hoses and tubing;

   (d) leaking hydraulic fluid;

   (e) brake chambers and mark each push rod;

   (f) relay valves;

   (g) drums and discs; and

   (h) linings or pads if visible.

7. Frame and frame assemblies.

8. Suspension assembly and other axle positioning parts.

L. Proceed toward trailing unit(s) examining enroute:

1. Proper securement of load, dunnage, and spare tire.

2. Placarding, if applicable.

3. Condition of frame/frame assemblies.

M. At left rear side examine:

1. Wheels, rims, fasteners, and tires.

2. Sliding axle positioning components. (NOTE: Check under carriage components both left and right sides.)

3. Suspension assembly and other axle positioning parts.

4. Frame and cross members.

5. Rear axle brake components;

   (a) brake drums (hot, cold);

   (b) air leaks (audible);

   (c) air reservoir;

   (d) hoses and tubing;

   (e) leaking hydraulic fluid;

   (f) brake chambers and mark each push rod;

   (g) relay valves;

   (h) drums and discs;

   (i) linings or pads if visible; and

   (j) if doubles (triples), check coupling device and components, then repeat items in L and M.

N. <u>At the rear of the vehicle examine</u>:

1. Stop lamps.

2. Turn signals.

3. Placarding, if applicable.

4. Tail lamps (if during period lighted lamps are required).

5. Examine flags and/or light on rear of projecting loads.

6. Note on inspection form, if desired, for the benefit of the carrier, any inoperative ID or clearance lamps.

O. <u>Proceed up the right side of the vehicle</u>. With the exception of the under carriage inspection, repeat the examination procedure outlined in paragraphs L, M, and N. Also examine exhaust system, if applicable.

NOTE: (Suggested marking violations.) Use chalk stick to record violations during the inspection as follows: Code each violation on the tread pattern of the tire nearest the violation. (Example: "trailer-L/F brake contaminated."

5. Tires and wheels.

6. Coupling devices (fifth wheels, pintle hook, eyes, and drawbars).

7. Suspension assembly and other axle positioning parts.

8. Safety chains.

9. Cargo securement.

10. Placards (if applicable).

e. Repeat procedure (as applicable) for all vehicles in the combination and for the right side of the vehicle(s) in reverse order starting at the right rear.

f. Return to driver's cab door:

Duties of Inspector No. 1 (writer)

1. Determine the operative condition of the warning signals, devices, or gauges required in the service brake system.

2. Make further tests for air pressure leaks, if deemed necessary.

g. <u>Conclusion</u>:

1. Place vehicle and/or driver out of service, if necessary.

2. Visually show driver all defects listed on inspection form and instruct driver in the disposition of driver - vehicle inspection form and in correction of Out-of-Service defects or violations.

3. Terminate the driver - vehicle examination by recording the time completed and the inspector's signature.

4. Request driver to sign the form and give driver the original.

5. Place O/S vehicle(s) in a suitable location.

a. On an Out-of-Service power unit, the O/S sticker is to be placed on the outside of the windshield (driver's side) in the driver's line of vision.

b. On an O/S trailer, the O/S sticker is to be placed on the left front of the trailer at about eye level where the sticker would be easily observed by someone coupling or uncoupling the vehicle combination.

c. On an O/S converter dolly, the O/S sticker is to be placed behind the tongue eye on the draw bar.

Note: Do not allow vehicle displaying an "Out-of-Service" sticker to be driven. If necessary to escort "Out-of-Service" vehicles to another location, do not affix sticker until vehicle is parked at that location.

6. Have driver set the parking brake and remove wheel chocks.

7. If warranted, affix a CVSA decal(s).

Additional Inspection Items (Buses).

h. Interior Examination of Buses (Inspector No. 1)

1. Standee line or bar and sign near front requiring passengers to be behind line when bus is in operation.

2. Fire extinguisher.

3. Floor free of holes/openings.

4. Seats securely fastened to the vehicle.

5. Windows laminated safety glass and markings indicating that they may be used as an emergency exit.

6. If equipped with emergency doors, decal, or lettering indicating it as an emergency exit and identified by an operative red lamp.

7. Baggage or freight stowed and secured as appropriate.

Note: For general and specific inspection procedures for hazardous material shipments - refer to the 1) cargo tank inspection guide; 2) the hazardous materials inspection guides as per BMCS and MTB.

ks/4017N

October 3, 1985

RECOMMENDED

DRIVER-VEHICLE INSPECTION PROCEDURE

Two Man Inspection Team

One inspector to write inspection form, the other to inspect the vehicle(s) - all defects are to be visibly marked for ease of writeup. (This will expedite the inspection process.)

A. Park Vehicle - place chock blocks in position on the driver's side, one in front and one behind the drive axle tires, or between axles.

B. Approach the driver, identify yourself, and explain to the driver what you are going to do, and, if requested, display your credentials.

C. Observe if:

1. Vehicle is equipped with seat belt assembly.

2. Driver was using seat belt.

D. Instruct the driver to:

1. Secure the engine; place transmission in neutral; release all brakes; inform driver that the wheels are chocked.

Note: At this time, the writer is positioned near the front of the vehicle, and the inspector at the rear of the vehicle(s).

2. With ignition on, turn on the head lamps, then turn signals; then apply foot valve for a brake-lamp check. (With this procedure, all lamps can be checked front and rear simultaneously.)

3. Remove expired CVSA decal, if applicable.

Note: Inspector No. 1 (writer) and Inspector No. 2 (mechanical inspector), start their respective duties.

E. Duties of Inspector No. 1 (writer). Obtain from the driver the following:

1. Operator's license, medical certificate, and appropriate documents to I.D. the carrier and vehicles (i.e., registration, leases, etc.).

2. Record of duty status and driver's vehicle inspection report.

3. Shipping papers, charter order, trip manifest, etc.

4. Additional shipping paper requirements if transporting hazardous materials (177.817.):

   a. Must be within immediate reach of the driver while restrained by a safety belt, and

   b. If carried with other shipping papers, they must be clearly distinguished by either appearing first or by having them tabbed.

   c. An initial carrier must not accept a hazardous material unless it contains a shipper's certification.

   d. The shipping paper must show the proper shipping name, hazard class, and identification number (in sequence), and the total quantity (weight or volume) as required by Subpart C- 172.200-172.205.

   e. A Hazardous Waste Manifest may be carried in lieu of shipping papers and shipping papers are not required for materials which have been reclassified as Consumer Commodity - ORM D.

F. RAM - Highway Route Controlled Quantity (additional)

1. Copy of written route plan.

2. Driver has in immediate possession a certificate of training as per 177.825.

G. Return appropriate documents to driver.

Notes: 1. For the protection of the mechanical inspector and to expedite the inspection, the writer stays with the driver during the undercarriage inspection process.

2. Always use chock blocks to prevent a vehicle(s) from moving.

3. Never go underneath a vehicle(s) with the engine running.

4. The mechanical inspector should enter and exit vehicle undercarriage in view of writer (driver's side).

5. Mechanical inspector should not be positioned in extremely dangerous positions (i.e., between tandem

axles) when checking tires, inside wheels and suspension components, or between front fender well and front tire when checking steering components.

6. Writer should give all instructions to driver clearly to avoid miscommunication and accidents.

H. Duties of Inspector No. 2 (mechanical inspector - positioned at rear of vehicle(s). (A system of hand signals should be developed between inspectors and conversation kept to a minimum. Drivers hearing a discussion on a problem will want to leave the cab of the vehicle and see the problem. This extends the inspection time.)

1. Simultaneous lamp check as described in D-1; tail lamps, stop lamps, and turn signals. (Thumb up - operative - Thumb down - inoperative • Point in direction for turn signal operation.)

2. Check placards if applicable.

3. Notify writer and enter underneath the rear-most vehicle, begin inspection as follows:

   a. Brake adjustment - mark each brake chamber push rod as close to the back of the brake chamber as possible. (Welders' flat soap stone works well for this procedure.) Signal the writer to have the driver apply the brakes (80-90 psi). If a trailer is being checked, have the driver apply the brakes utilizing the trailer hand valve (if equipped). This will conserve air for future applications. Measure the distance the push rod has traveled. (Measurement can be noted by using white chalk and writing on the tires.)

   b. Examine the following while beneath each vehicle (as appropriate).

      1. Brake drums or discs.

      2. Linings or pads, anchor pins, cam roller, etc., if visible.

      3. Cam bushings.

      4. Air reservoir(s).

      5. Relay valve (E.R. Valve).

      6. Hoses and tubing.

      7. Air leaks.

8. Observe parking brake application (as applicable).

Note: Have driver operate brakes if deemed necessary to observe moving parts.

9. Frame.

10. Suspension, including leaf springs, U-bolts, air springs, equalizing beams or assemblies, torque arms/radius rods, etc.

11. Inside of tires and wheels.

c. Proceed under front of power unit.

1. Request driver to rock steering wheel - Inspector No. 1 (writer) - observes steering wheel lash; Inspector No. 2 - observes for any relative motion in:

a. Steering gear box attachment to frame.

b. Pitman arm, drag link, steering arm, and tie rod end ball joints and clamps.

2. Brake adjustment (if applicable).

3. Brake components as in H-3 (if applicable).

a. Compressor and belts (if applicable).

4. Suspension components.

5. Hubs.

6. Inside of tires/wheels.

7. Exhaust leaks.

8. Frame.

d. Proceed with perimeter inspection beginning at left side of power unit (moving counterclockwise) and check as appropriate.

1. Steering axle tire, wheel, hub.

2. Fuel system, tank, hoses.

3. Cab protection (if applicable).

4. Air hoses and connections.

Simply write with chalk on L/F tire tread area: L/F Br. Cont.) On brake adjustment violations, mark with chalk on the lower inside portion of the nearest tire. (Example: "1/4" - this signifies that a type 30 brake push rod travel is 2-1/4 inches -- if another type of chamber, such as a Type 36, write TP36-1/4.") This method will save time during the inspection procedure by alleviating the inspector from carrying clipboard since he/she will more than likely be carrying a creeper and other items of equipment. Upon completion of inspection, inspector can then walk around vehicle recording violations on the inspection form.

P. Return to driver's cab door:

1. Request driver to make a full brake application and hold. Moving counterclockwise, go under vehicle and measure each push rod previously marked and record the measurement.

2. Determine the operative condition of the warning signals, devices, or gauges required in the service brake system. Also, check required safety equipment.

Q. Cargo Tank Inspection. In addition to the previously listed examination procedures, the inspection of a cargo tank will ordinarily include the items listed below:

1. Certification plate for DOT specification.

2. Current retest date, if applicable (hydrostatic and/or visual).

3. Shut off valve, remote control.

4. Emergency flow control:

   (a) self-closing shut off valve; and

   (b) self-closing automatic (heat actuated means).

5. Filling and discharge manual shut off valves, internal shut off valves, piping and fittings, and protection from damage.

6. Rear bumper.

7. At top of tank inspect:

   (a) overturn protection;

   (b) manhole assemblies and fill openings (if permitted by State law); and

(c) presence of vents.

8. General condition of tank. Check for dents, corroded areas, rips or tears, leaks, defects in welds, and other visible conditions which indicate a violation. (NOTE: On insulated tanks be sure whether the damage is in the tank or the insulation.)

9. Placards and identification numbers:

   (a) appropriate placards, if required; and

   (b) identification numbers, when required.

R. Leakage of Hazardous Materials. Leaking of any product, except combustible liquids, classified as hazardous material inside or outside of a vehicle is to be handled as follows:

1. Contact an appropriate local law enforcement official and make arrangements to park the vehicle in a suitable place until disposition of the matter is resolved. The vehicle is to be placed out of service.

2. Contact the motor carrier and other appropriate governmental agencies, if necessary, and advise the nature and extent of the leak and the location of the vehicle.

S. Conclusion:

1. Place vehicle and/or driver out of service, if necessary.

2. Instruct driver in disposition of inspection form and in correction of out-of-service defects or violations.

3. Place O/S vehicles(s) in a suitable location:

   (a) On an out-of-service power unit, the O/S sticker is placed on the outside of the windshield (driver's side) in the driver's line of vision.

   (b) On an out-of-service trailer, the O/S sticker is placed on the left front of the trailer at about eye level where the sticker would be easily observed by someone coupling or uncoupling the vehicle combination.

   (c) On an out-of-service converter dolly, the O/S sticker is placed behind the tongue eye on the draw bar.

October 3, 1985

Note: (1) Do not allow vehicles displaying an "out-of-service" sticker to be driven. If necessary to escort "out-of-service" vehicles to another location, do not affix sticker until vehicle is parked at that location.

ks/4016N

(4)

A GUIDE FOR THE INSPECTION OF RADIOACTIVE MATERIAL SHIPMENTS BY MOTOR VEHICLE OR AT FREIGHT FACILITIES

F

SUPPLEMENTAL INFORMATION
DOCKET MC-92-4

U.S. Department of Transportation

Research and Special Programs Administration

DATE OF PUBLICATION November 1988

A GUIDE FOR THE INSPECTION OF RADIOACTIVE MATERIAL SHIPMENTS BY MOTOR VEHICLE OR AT FREIGHT FACILITIES

PREPARED FOR:

U.S. DEPARTMENT OF TRANSPORTATION
RESEARCH AND SPECIAL PROGRAMS ADMINISTRATION
OFFICE OF HAZARDOUS MATERIALS TRANSPORTATION
WASHINGTON, D.C.

PREPARED BY:

SCIENCE APPLICATIONS INTERNATIONAL CORPORATION
OAK RIDGE, TENNESSEE

This inspection guide was prepared under interagency agreement DOE-40-810-83 between the U.S. Department of Transportation and the U.S. Department of Energy.

Error

An error occurred while processing this page. See the system log for more details.

Error

An error occurred while processing this page. See the system log for more details.

Error

An error occurred while processing this page. See the system log for more details.

Error

An error occurred while processing this page. See the system log for more details.

Error

An error occurred while processing this page. See the system log for more details.

Error

An error occurred while processing this page. See the system log for more details.

Error

An error occurred while processing this page. See the system log for more details.

Error

An error occurred while processing this page. See the system log for more details.

Radioactive material shipments must be

- Secured against movement within the vehicle, (§177.834) and
- Blocked and braced to prevent change of position during conditions normally incident to transportation (§177.842).

Figure 6B

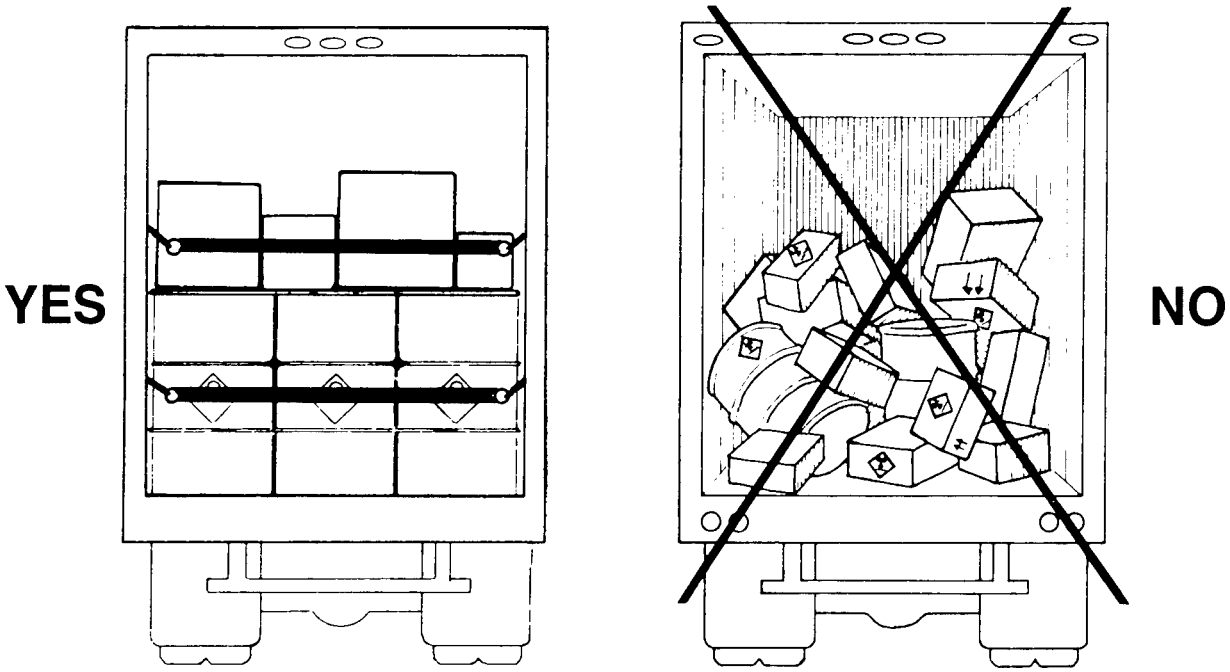

APPENDIX A
VIOLATION CITATION APPENDIX

SHIPPING PAPER	VIO.	REFERENCE
1. Shipping Paper		§ 172.200(a)
2. Contents		
a. Order/Color/"X"		§ 172.201(a) (1)
b. Legible English		§ 172.201(a) (2)
c. Continuation page		§ 172.201(c)
3. Shipping Name		§ 172.202(a) (1)
4. Hazard Class		§ 172.202(a) (2)
5. Identification Number		§ 172.202(a) (3)
6. Total Quantity (weight or volume)		§ 172.202(a) (4)&(c)
7. Sequence		§ 172.202(b)
8. Additional Description—RAM		§ 172.203(d)
a. Radionuclide		§ 172.203(d) (1) (i)
b. Physical and Chemical Form		§ 172.203(d) (1) (ii)
c. Activity in Curies		§ 172.203(d) (1) (iii)
d. Highway Route Controlled Quantity		§ 172.203(d) (1) (iii)
e. Label Applied		§ 172.203(d) (1) (iv)
f. Transport Index		§ 172.203(d) (1) (v)
g. Fissile Data (if required)		§ 172.203(d) (1) (vi)
h. Packaging Approval(s)		§ 172.203(d) (1) (vii), (viii)

SHIPPER CERTIFICATION	VIO.	REFERENCE
1. Basic Paragraph		
a. General Requirements		§ 172.204(a) (1)
b. All Mode Certification		§ 172.204(a) (2)
2. Signature		§ 172.204(d)

MARKING	VIO.	REFERENCE
1. Shipping Name		§ 172.301(a)
2. Identification Number		§ 172.301(a)
3. Specifications		§ 172.304
In English		§ 172.304(a)
Not Obscured		§ 172.304(a) (2)&(4)
4. Name/Address of Consignee (or Consignor)		§172.306(a)
5. This Side Up (Liquid)		§172.312(a)
6. Radioactive Materials		§ 172.310
a. Gross Weight (110 lbs [50 kg] or more)		§ 172.310(a) (1)
b. "Type A" or "Type B" Package		§ 172.310(a) (2)
c. "USA" - Export Only		§ 172.310(a) (3)
7. DOT Specification (If Specification Container Required)		Part 178 and §173.24(c)(1)(i)

LABELING	VIO.	REFERENCE
1. Table Label		§ 172.400(a)
2. Radioactive Material		§ 172.403
a. Correct Label		§ 172.403(b)-(c)
b. RAM Plus Other HM		§ 172.403(e)
c. 2 Labels		§ 172.403(f)
d. Contents, Curies, TI		§ 172.403(g)
3. Mixed Packagings		§ 172.404
4. Placement		§172.406(a)

PLACARDS	VIO.	REFERENCE
1. Prohibited Placarding		§ 172.502
2. General Requirements		§ 172.504
3. Carrier Requirements		§ 172.506(a)(1)
4. Highway Route Controlled Quantity		§ 172.507
5. Visibility & Display		§ 172.516
6. General Specifications for Placard		§ 172.519

HIGHWAY TRANSPORTATION	VIO.	REFERENCE
1. General Requirements		§ 171.2
a. Shipper		§ 171.2(a)
b. Carrier		§ 171.2(a)&(b)
2. Driver Training Requirement		§ 177.800
3. Compliance with Motor Carrier Safety Regulations		§ 177.804
4. Incident Reporting		§ 171.5 and § 177.807
5. Connecting Carrier Requirement		§ 177.808
6. Lost or Destroyed Labels		§ 177.815
7. Shipping Paper		§ 177.817
a. General Requirements		§ 177.817(a)
b. Certification		§ 177.817(b)
c. Accessibility		§ 177.817(e)
8. Marking & Placarding		§ 177.823
9. Routing & Training Requirements - RAM		§ 177.825
10. Loading & Unloading a. General		§ 177.834
b. Radioactive Materials		§ 177.842
c. Contamination of Vehicles - RAM		§ 177.843
11. Hazardous Material Loading & Storage Chart		§ 177.848
12. Accidents - RAM		§ 177.861
13. Hazardous Material on Passenger Vehicles		§177.870
a. Radioactive Materials		§177.870(g)
14. Hazardous Material Driving & Parking Rules		*
a. Applicability		§ 397.1
b. Compliance with Motor Carrier Safety Regulations		§ 397.2
c. State & Local Laws		§ 397.3
d. Attendance & Surveillance		§ 397.5
e. Parking		§ 397.7
f. Fires		§ 397.11
g. Fueling		§ 397.15
h. Tires		§ 397.17
15. Vehicle Identification		§ 390.21

* The Federal Motor Carrier Safety Regulations are incorporated by reference in §177.804.

APPENDIX B

Identification Number Cross Reference to Radioactive Material Proper Shipping Names in § 172.101

(1) Identification Number	(2) Description
UN2908	Radioactive material, empty packages
UN2909	Radioactive material, articles manufactured from natural or depleted uranium or natural thorium
UN2910	Radioactive material, limited quantity, n.o.s.
UN2911	Radioactive material, instruments and articles
UN2912	Radioactive material, low specific activity or LSA, n.o.s.
UN2918	Radioactive material, fissile, n.o.s.
UN2974	Radioactive material, special form, n.o.s.
UN2975	Thorium metal, pyrophoric
UN2976	Thorium nitrate
UN2977	Uranium hexaflouride, fissile
UN2978	Uranium hexaflouride, low specific activity
UN2979	Uranium metal, pyrophoric
UN2980	Uranyl nitrate hexahydrate solution
UN2981	Uranyl nitrate, solid
UN2982	Radioactive material, n.o.s.
NA9180	Uranyl acetate

Error

An error occurred while processing this page. See the system log for more details.

Error

An error occurred while processing this page. See the system log for more details.

Error

An error occurred while processing this page. See the system log for more details.

Error

An error occurred while processing this page. See the system log for more details.

Error

An error occurred while processing this page. See the system log for more details.

Error

An error occurred while processing this page. See the system log for more details.

Error

An error occurred while processing this page. See the system log for more details.

Error

An error occurred while processing this page. See the system log for more details.

Error

An error occurred while processing this page. See the system log for more details.

Error

An error occurred while processing this page. See the system log for more details.