Aviation Fire Suppression Systems
Halon 1301 Handling

Aviation Fire Extinguishers

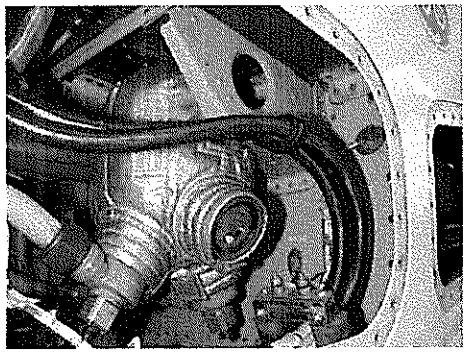

Cessna Engine Bottle
(W blanket)

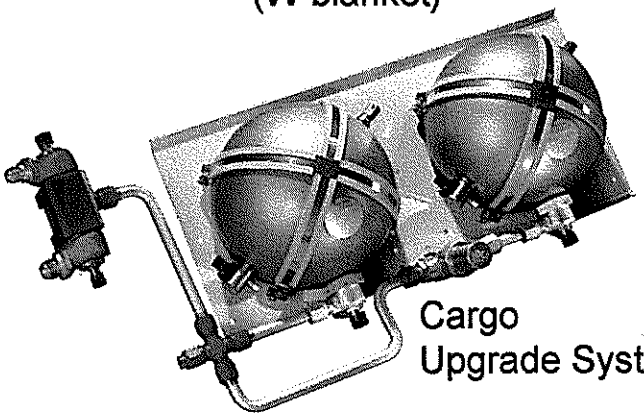

Cargo
Upgrade System

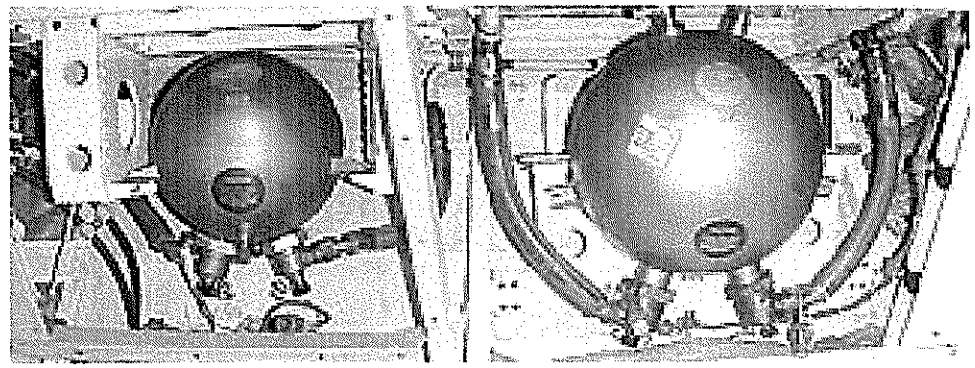

Fokker 100 Cargo Installation

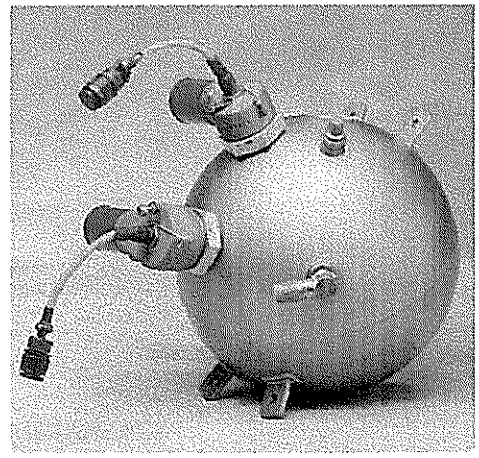

Boeing 747 Engine Bottle

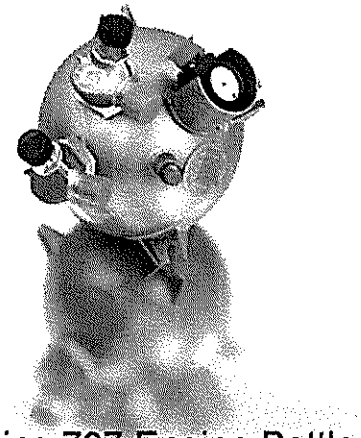

Boeing 737 Engine Bottle

- Purpose-built high pressure containers for Halon 1301
- Installation unique mounting, discharge, and actuating interfaces
- Contain one half pound to one hundred five pounds of Halon 1301 / nitrogen

Why?

- 14 CFR Parts 25 defines the requirement for these devices onboard an aircraft.
- FAA Aircraft Type Certificate incorporates the design as part of the airplane certification package and controls the design and application of the products.
- 49 CFR 173.301 regulation requires 4DS and exemptions thereof (E-7945 for this company) to meet re-test .
- DOT E 10990 Specifies re-hydrotest requirements for aviation cylinders.

U.S. Department of Transportation

Federal Aviation Administration

Los Angeles - Manufacturing Inspection District Office
Transport Airplane Directorate

3960 Paramount Boulevard
Lakewood, California 90712-4137

January 4, 1999

Pacific Scientific
HTL/KIN-Tech Division
Attn: Cleo Pitman
1800 Highland Avenue
Duarte, California 91010

FEDERAL AVIATION ADMINISTRATION
PARTS MANUFACTURER APPROVAL

In accordance with the provisions of 14 CFR Part 21, Subpart K, we have found that the design data submitted by Pacific Scientific, HTL/KIN-Tech Division, with letter dated November 17, 1998, meets the airworthiness requirements of the regulations applicable to the products on which the parts are to be installed. Additionally, it has been determined that Pacific Scientific, HTL/KIN-Tech Division has established the fabrication inspection system required by Section 21.303(b) at 1800 Highland Avenue, Duarte, California. Accordingly, Parts Manufacturer Approval is hereby granted for production of the replacement parts listed in the enclosed Supplement No. 62 in conformity with the enclosed FAA approved design data.

Sincerely,

for James F. Connelly
Manager, Los Angeles Manufacturing
Inspection District Office

Page 1 of 1

FEDERAL AVIATION ADMINISTRATION - PARTS MANUFACTURER APPROVAL

PACIFIC SCIENTIFIC
HTL/KIN-TECH DIVISION
1800 HIGHLAND AVENUE
DUARTE, CALIFORNIA 91010

PMA NO.: PQ0236NM
SUPPLEMENT NO. 62
DATE: DECEMBER 30, 1998

NAME AND PART NO.	APPROVED REPLACEMENT FOR	APPROVAL BASIS & APPROVED DESIGN DATA	INSTALLATION ELIGIBILITY
Fire Extinguisher Hermetic Seal, 800 Cubic Inch P/N: 34600010-28	Boeing P/N: S453T201-28 Pacific Scientific P/N: 34600010-28	Identicality per 14 CFR § 21.303 Dwg No: 34600010-28 Rev.: H Date: 9/24/96, or later FAA approved revisions	Boeing Airplane Model(s): 727, 727C, 727-100, -100C, -200, -200F series; 737-100, -200, -300, -400, -500, -600, -700, -800 series

----------END OF LISTING----------

NOTE: Minor design changes (reference 14 CFR part 21 §21.93 and §21.95) must be submitted in a manner as determined by the ACO. Major design changes (reference 14 CFR part 21 §21.93 and §21.97) to drawings and specifications are to be handled in the same manner as that for an original FAA-PMA.

Rejean Chartier
Manager, Propulsion Branch
Los Angeles Aircraft Certification Office

for James F. Connelly
Manager, Los Angeles Manufacturing
Inspection District Office

Aviation Fire Extinguishers

A320

AIRCRAFT MAINTENANCE MANUAL

ENGINE FIRE EXTINGUISHING - DESCRIPTION AND OPERATION

1. General

The fire extinguishing system is activated when fire is detected by the fire and overheat detection system (Ref. ATA 26-12-00).

The system has two main functions:
- to extinguish at its early stage any fire occurring in the nacelle protected zones.

- to prevent engine fire from spreading:
  the engine is isolated from the rest of the aircraft ; the various supplies such as hot air, fuel, hydraulics, electrical power are closed for the purpose.

2. Component Location
(Ref. Fig. 001)

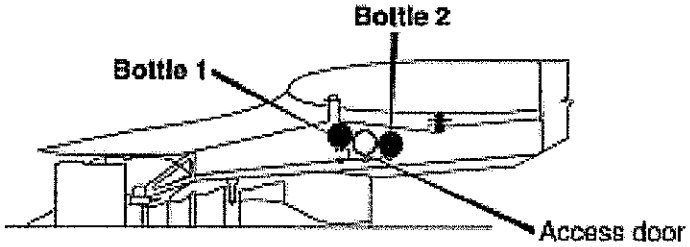

A320

AIRCRAFT MAINTENANCE MANUAL

6. Component Description

The fire extinguishing system comprises for each engine:

- on the ENG/APU FIRE panel (20VU):
  . one ENG 1(2) FIRE pushbutton switch
  . two SQUIB/DISCH (AGENT 1 and AGENT 2) pushbutton switches
  . one TEST Pushbutton switch

- two fire extinguisher bottles located in the engine pylon

- extinguishing lines routed in the pylon and leading to the nacelle.

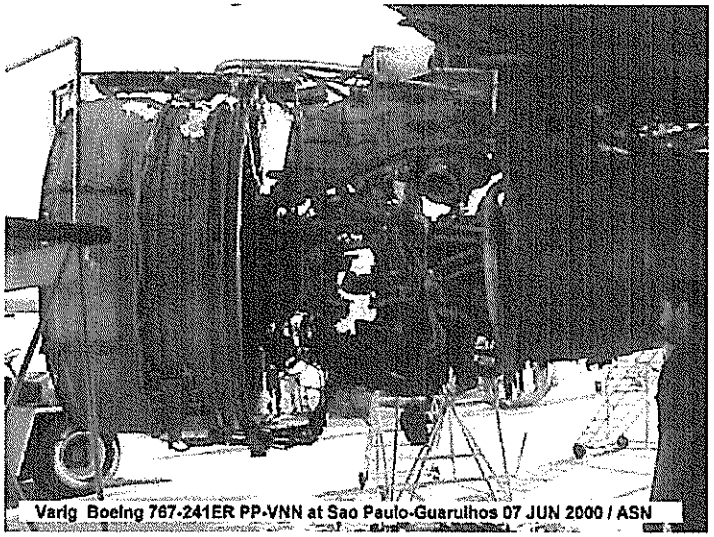
Varig Boeing 767-241ER PP-VNN at Sao Paulo-Guarulhos 07 JUN 2000 / ASN

Extinguisher installations

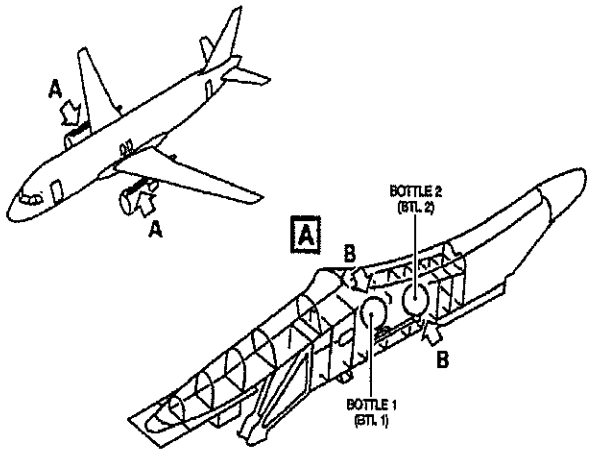

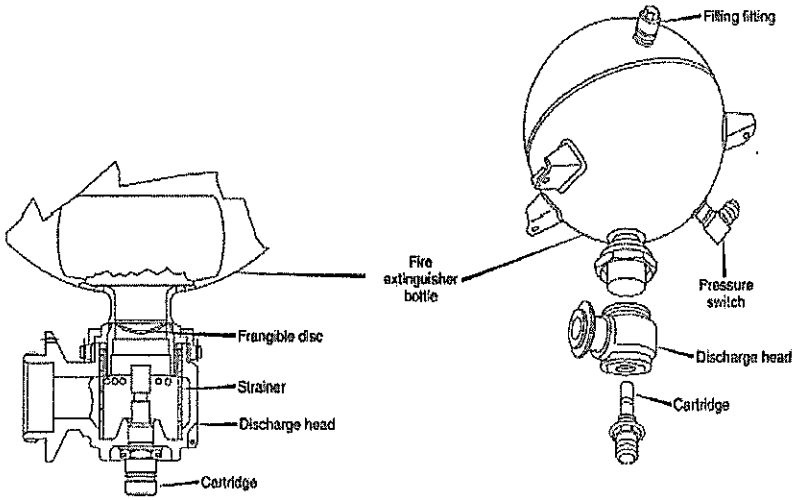

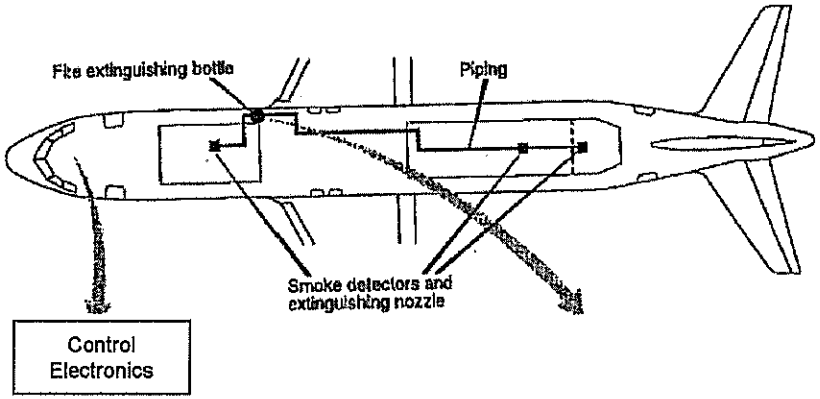

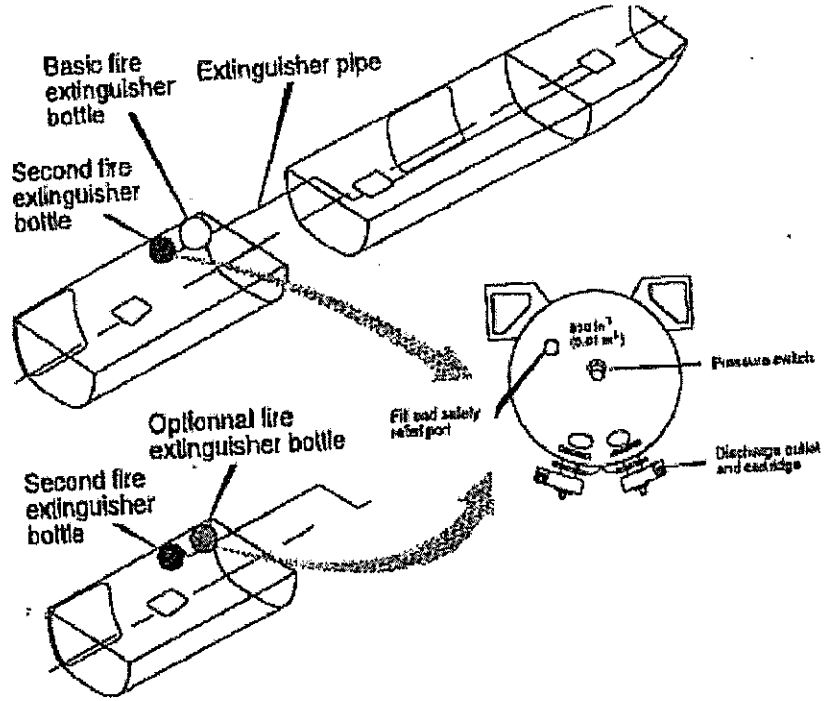

Why Overhaul a fire extinguisher ?

•To validate the integrity of the pressure vessel via hydrostatic testing.

•Regulations require it.

•Equipment is in severe environments, particularly temperature cycling and vibration.

•Equipment is high pressure and may be subject to slow leakage over time.

•Ancillary parts, cartridges, connectors fittings, threads, identification, indicating equipment may degrade the ability to function on command.

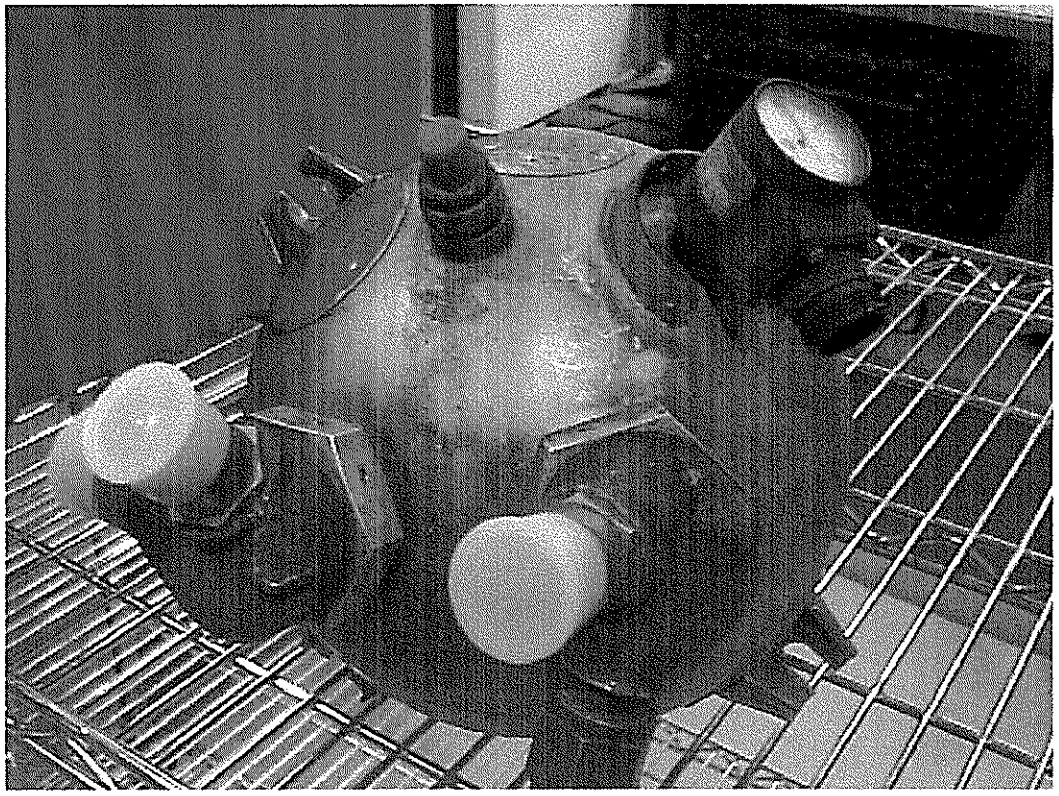

Repair Procedure – What is done

- Bottles may be fired (empty) or remain filled at receipt.
- All bottles are emptied, Halon is captured, Bottles torn down, Hydrostatically tested, rebuilt & refilled with Halon, recycled to spec requirements.
- Captured Halon is collected and recycled locally for re-use, or
- Recycling is contracted with certified gas handling house.

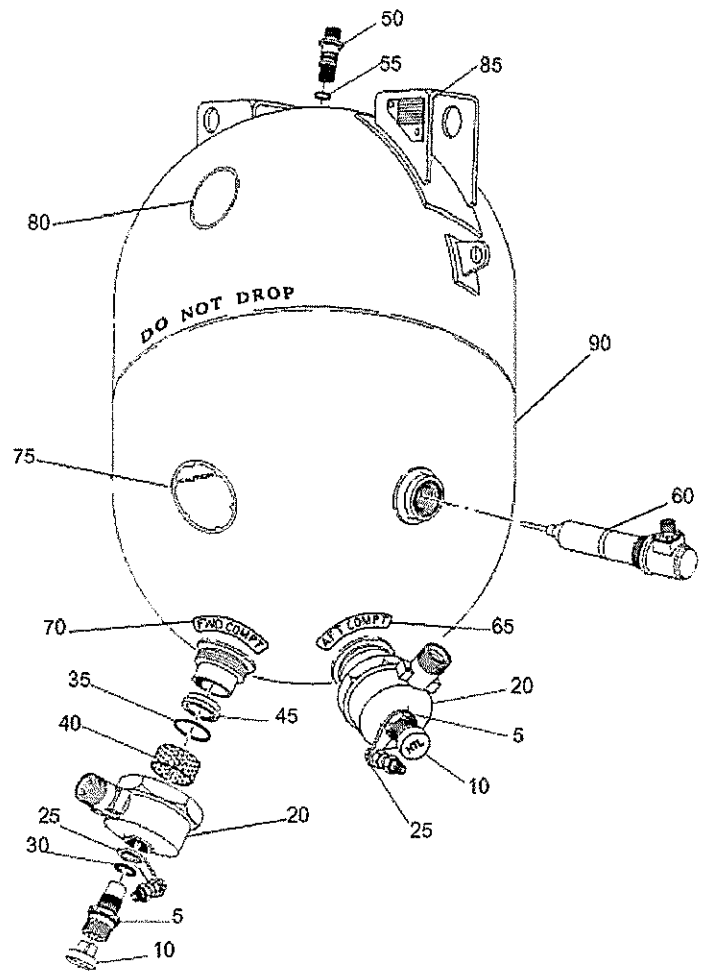

IPL Figure 1. 2170 Cubic Inch Dual Outlet Fire Extinguisher

Repair Procedure – What is done

Discharge & Halon recovery

DISCHARGE SETUP
FOR FILL FITTING
(PREFERRED METHOD)

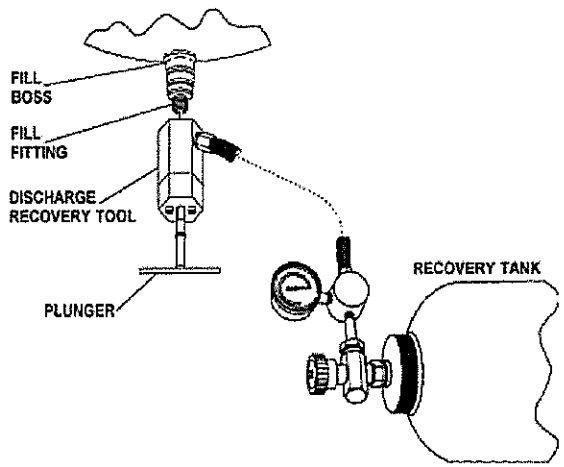

Figure 302. Discharge and Recovery Setup

WARNING: DO NOT DISCHARGE THE EXTINGUISHING AGENT INTO THE ATMOSPHERE. THE EXTINGUISHING AGENT MUST BE RECLAIMED AND RECYCLED. DO NOT HOLD THE FIRE EXTINGUISHER DURING DISCHARGE. THE DISCHARGE RECOVERY TOOL AND WELDMENT WILL ICE OVER.

Component removal

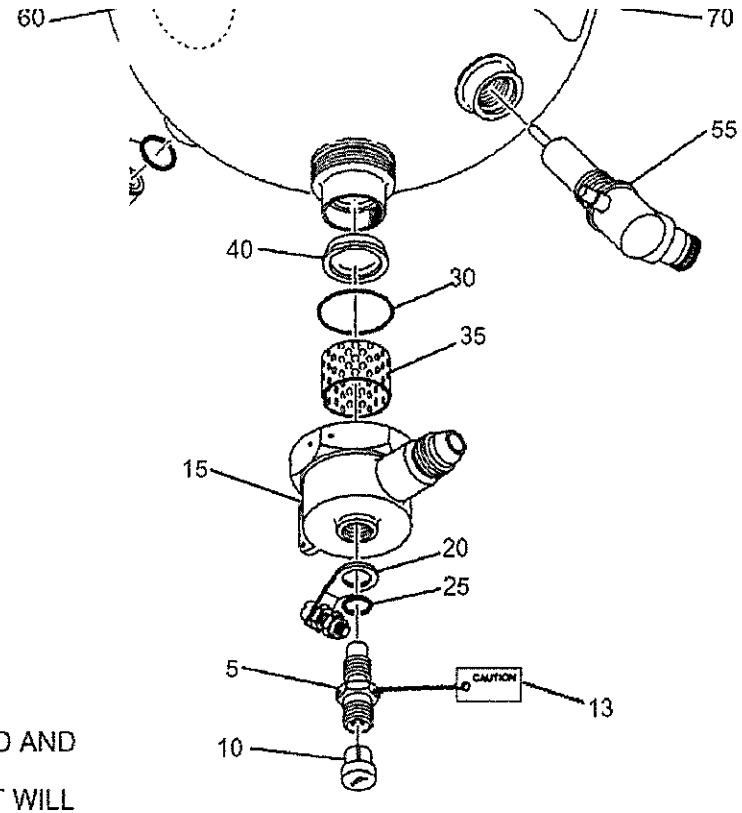

Repair Procedure – What is done

Component removal

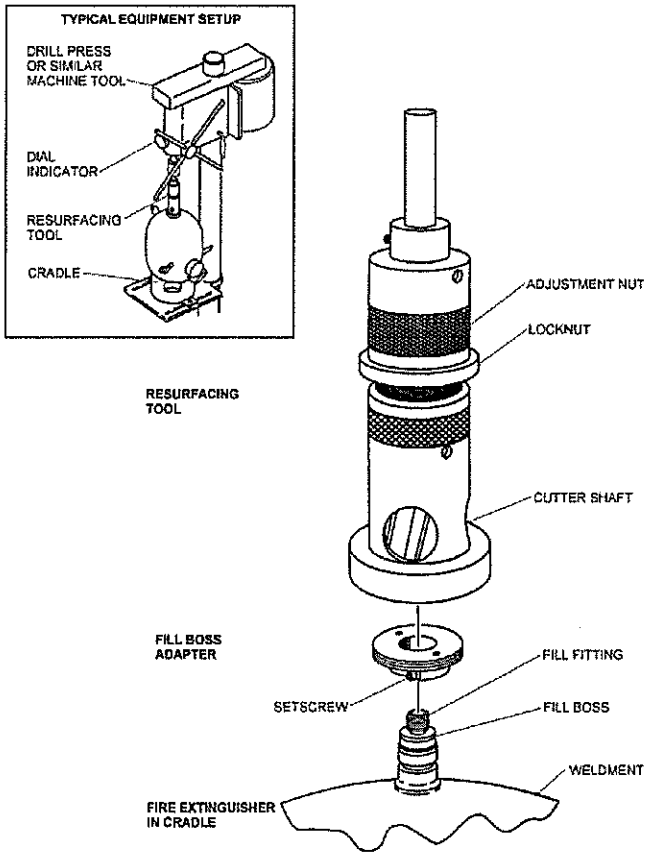

Figure 304. Fill Fitting Removal

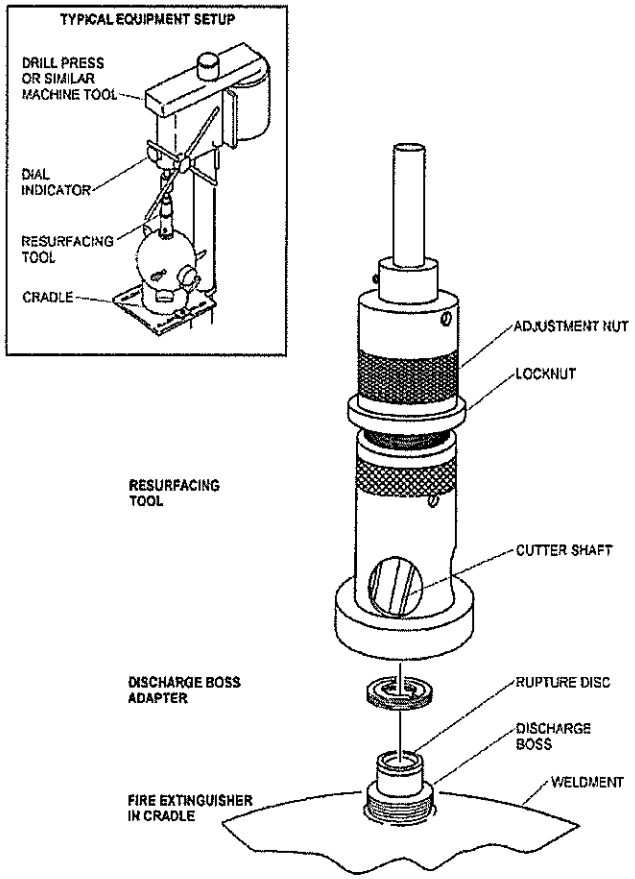

Figure 303. Rupture Disc Removal

Repair Procedure – What is done

Hydrostatic testing & recertification

Repair Procedure – What is done

Rebuild & parts re-installation

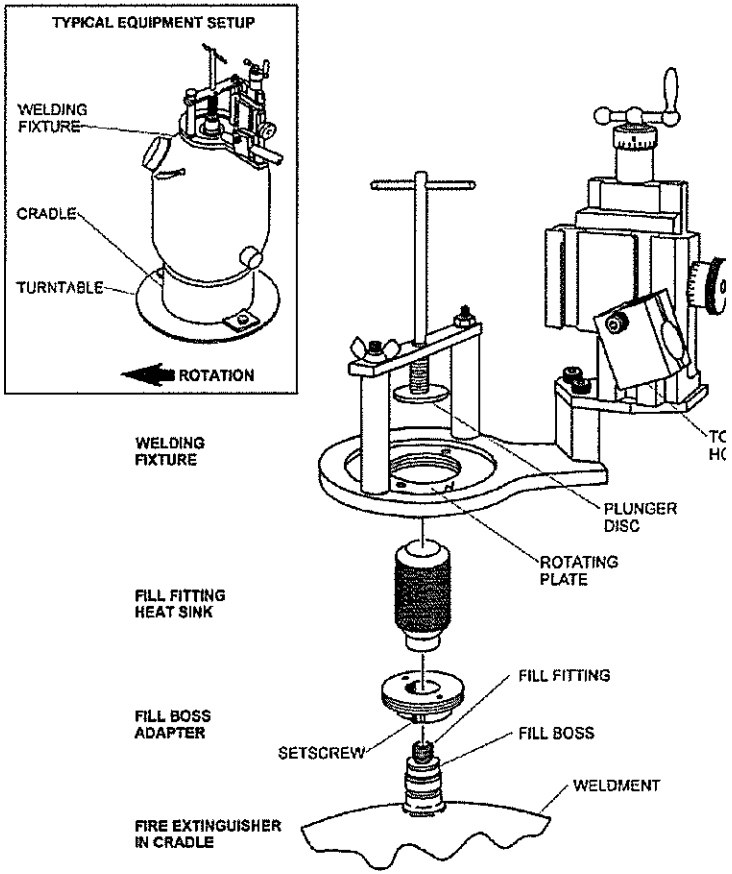

Figure 705. Fill Fitting Installation

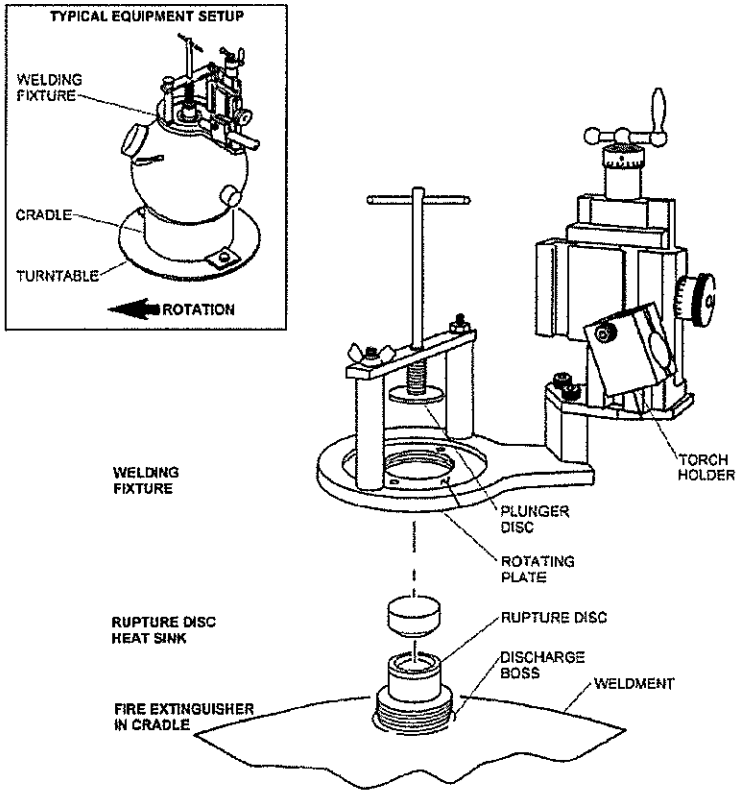

Figure 701. Rupture Disc Installation

Repair Procedure – What is done

Refill, pressurization and weight validation

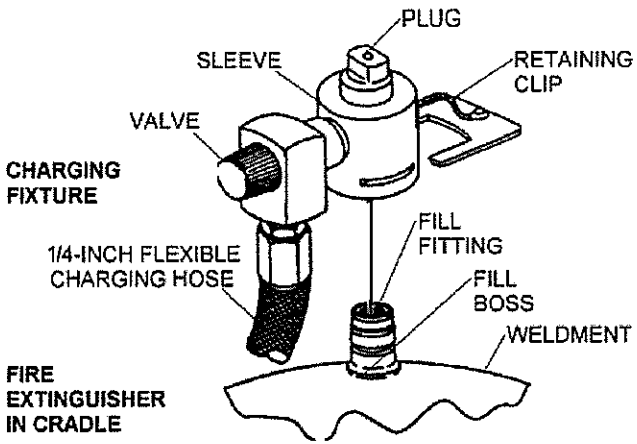

Figure 704. Charging Fixture Installation on Fill Fitting

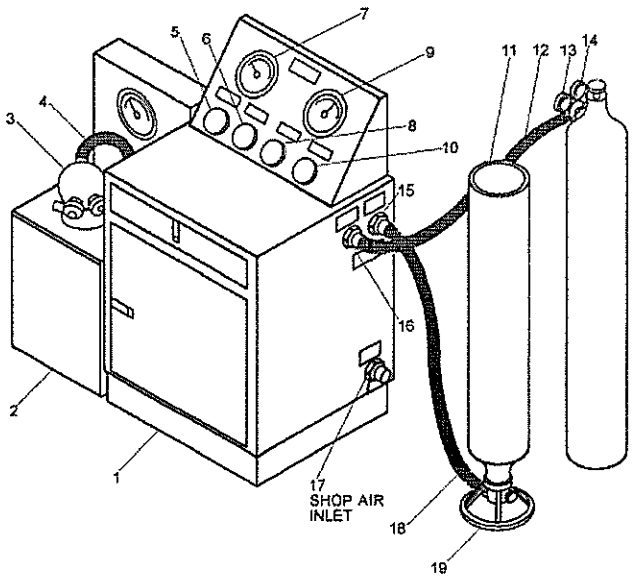

Repair Procedure

Return to service

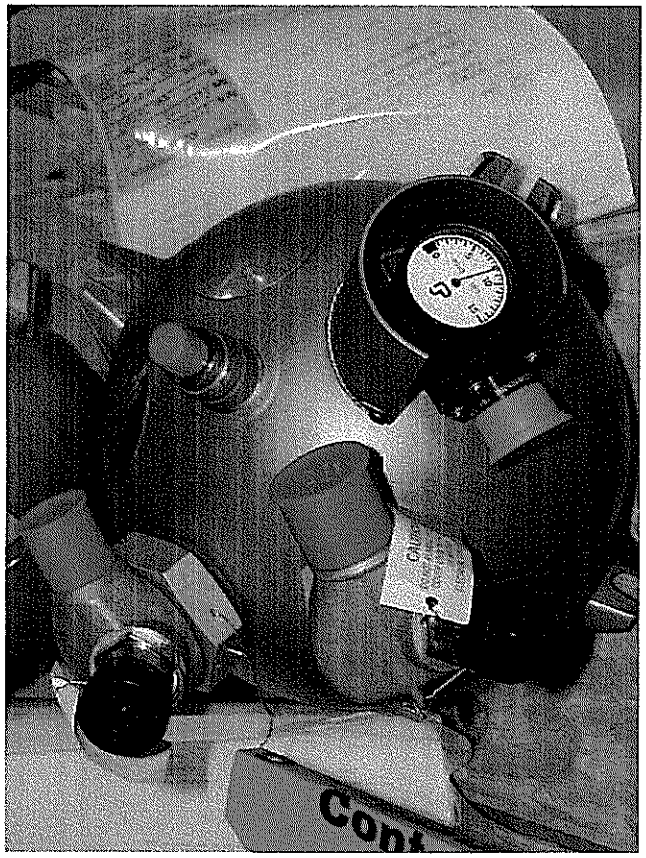

1. Approving National Aviation Authority/Country: FAA United States

2. **AUTHORIZED RELEASE CERTIFICATE**
FAA Form 8130-3, AIRWORTHINESS APPROVAL TAG

3. Form Tracking Number:

4. Organization Name and Address:

5. Work Order/Contract/Invoice Number:

6. Item:	7. Description:	8. Part Number:	9. Eligibility: *	10. Quantity:	11. Serial/Batch Number:	12. Status/Work:

13. Remarks:

14. Certifies the items identified above were manufactured in conformity to:
☐ Approved design data and are in a condition for safe operation.
☐ Non-approved design data specified in Block 12.

18. ☐ 14 CFR 43.9 Return to Service ☐ Other regulation specified in Block 13
Certifies that unless otherwise specified in Block 13, the work identified in Block 11 and described in Block 12 was accomplished in accordance with Title 14, Code of Federal Regulations, part 43 and in respect to that work, the items are approved for return to service.

15. Authorized Signature:	16. Approval Authorization No.:	20. Authorized Signature:	21. Approval Certificate No.:
17. Name (Typed or Printed):	18. Date (m/d/y):	22. Name (Typed or Printed):	23. Date (m/d/y):

User/Installer Responsibilities

It is important to understand that the existence of this document alone does not automatically constitute authority to install the part/component/assembly.

Where the user/installer performs work in accordance with the national regulations of an airworthiness authority different than the airworthiness authority of the country specified in Block 3, it is essential that the user/installer ensures that his/her airworthiness authority accepts parts/components/assemblies from the airworthiness authority of the country specified in Block 1.

Statements in Blocks 14 and 19 do not constitute installation certification. In all cases, aircraft maintenance records must contain an installation certification issued in accordance with the national regulations by the user/installer before the aircraft may be flown.

FAA Form 8130-3 (6-01) *Installer must cross-check eligibility with applicable technical data. NSN: 0052-00-832-0025

DANAHER

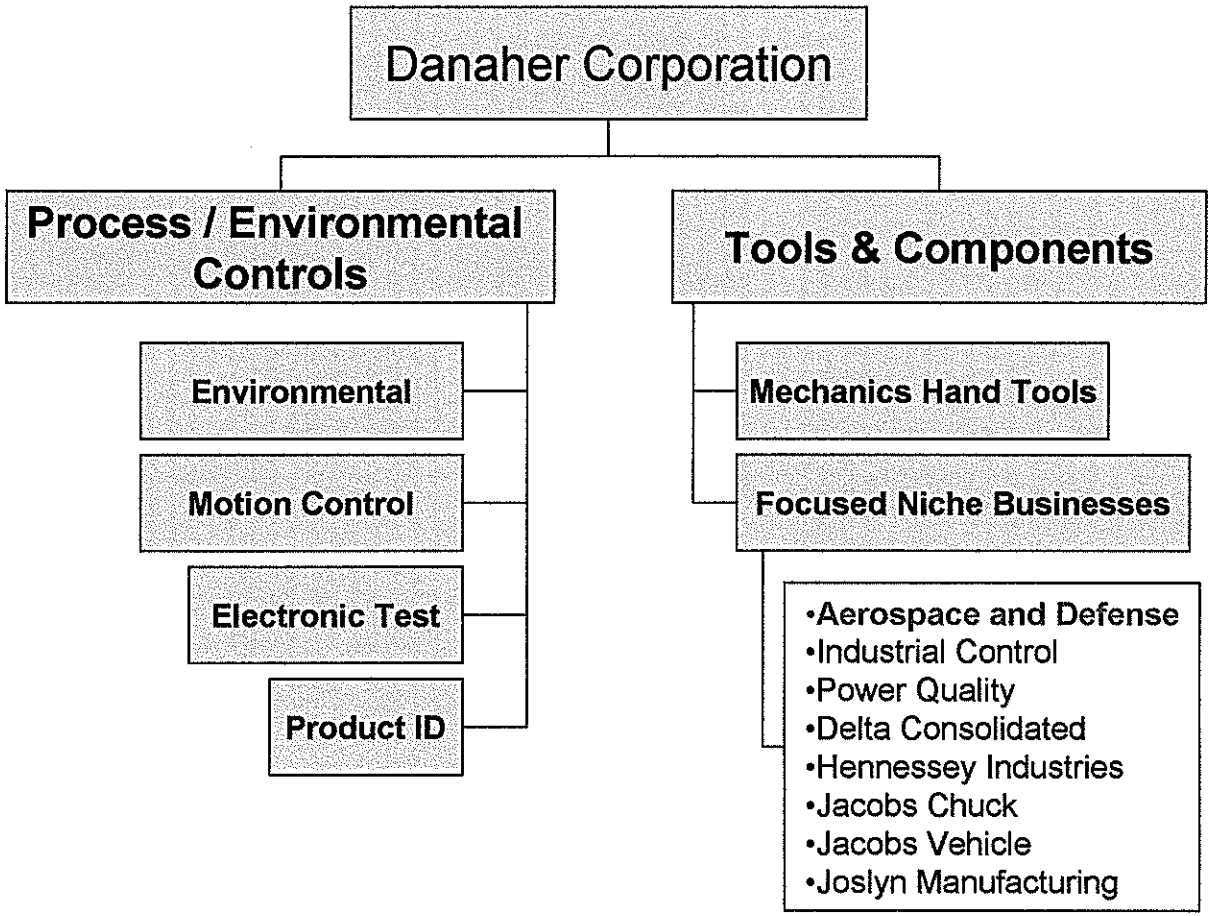
Danaher Corporation
Process / Environmental Controls
Tools & Components
Environmental
Motion Control
Electronic Test
Product ID
Mechanics Hand Tools
Focused Niche Businesses
•Aerospace and Defense
•Industrial Control
•Power Quality
•Delta Consolidated
•Hennessey Industries
•Jacobs Chuck
•Jacobs Vehicle
•Joslyn Manufacturing

Pacific Scientific Company
Aerospace & Defense Group

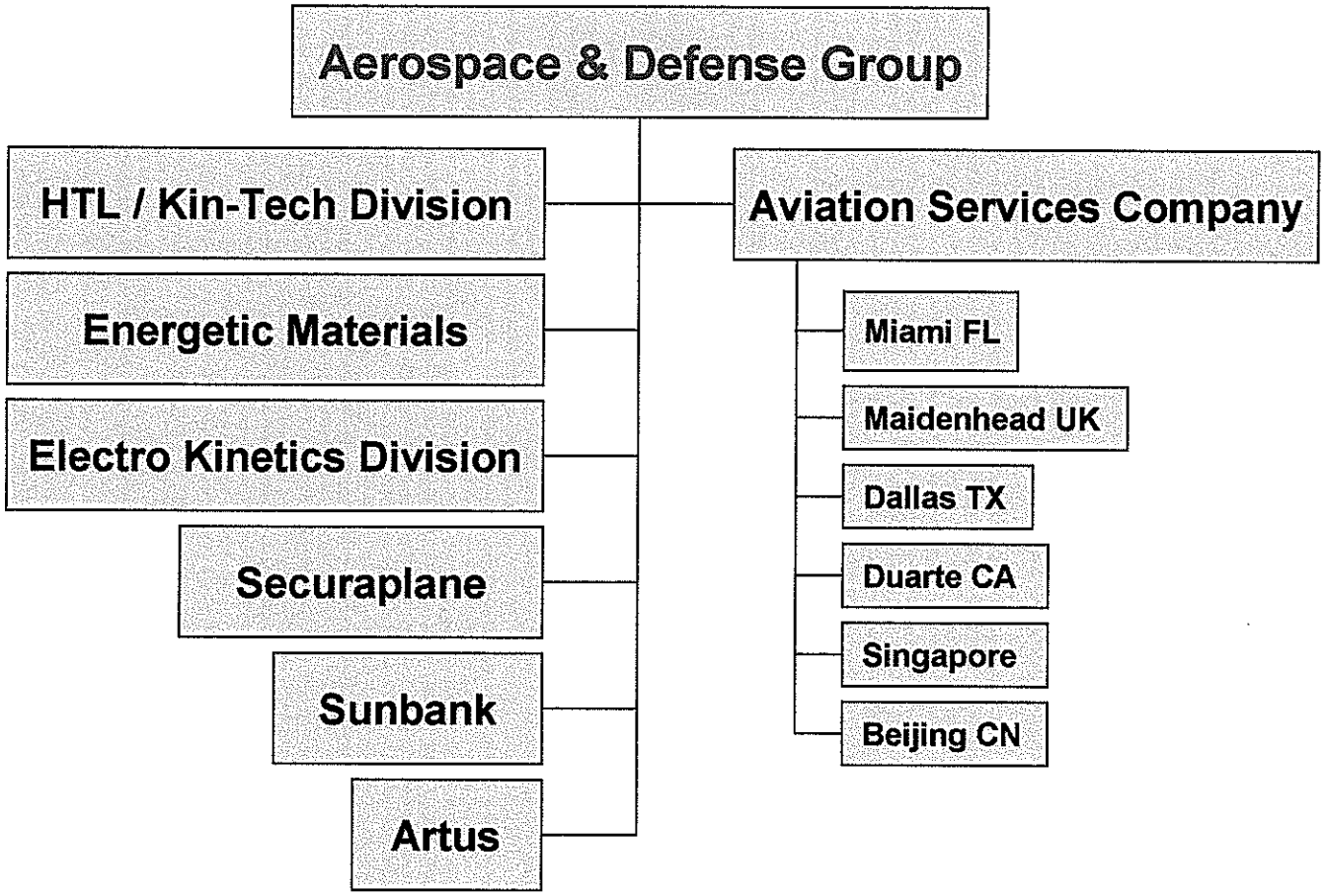

Quantities of Aircraft Extinguishers Imported for Repair (Est)

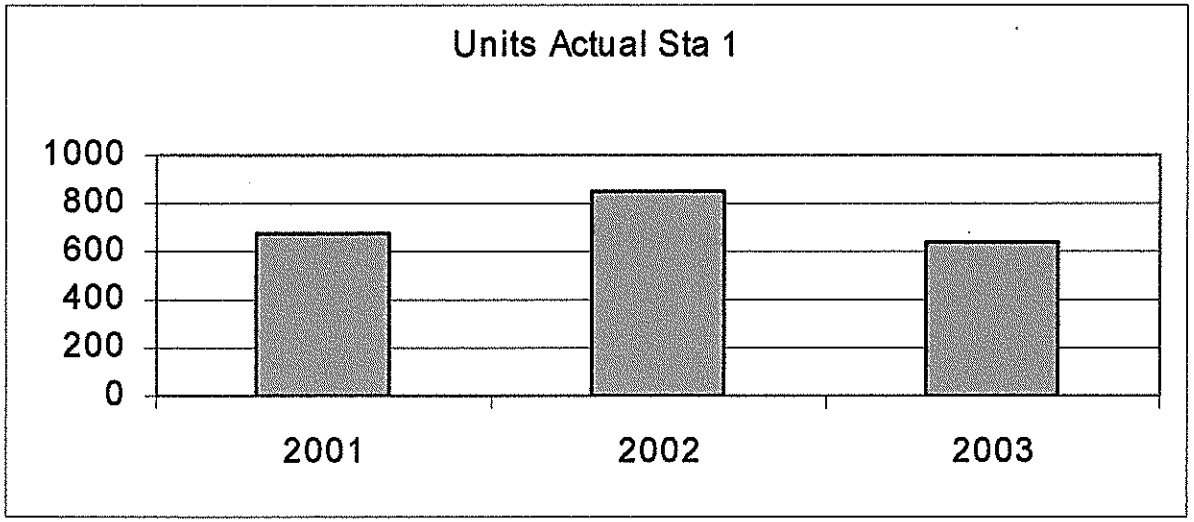

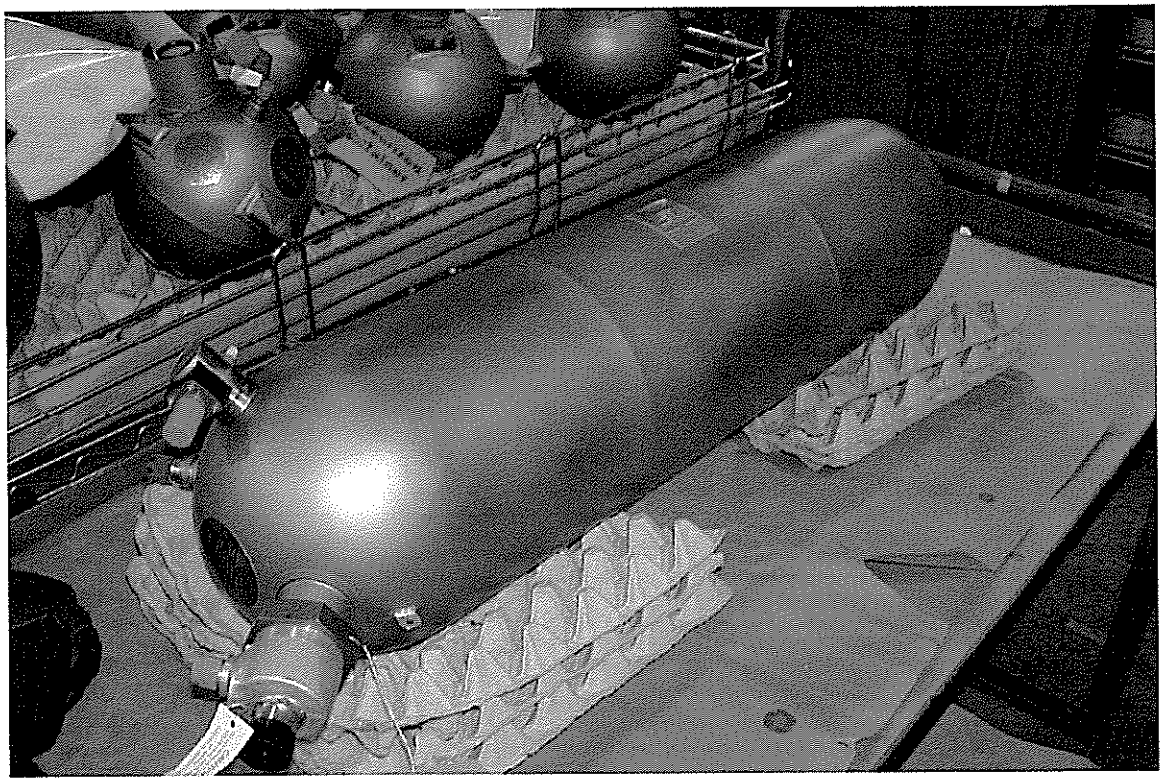

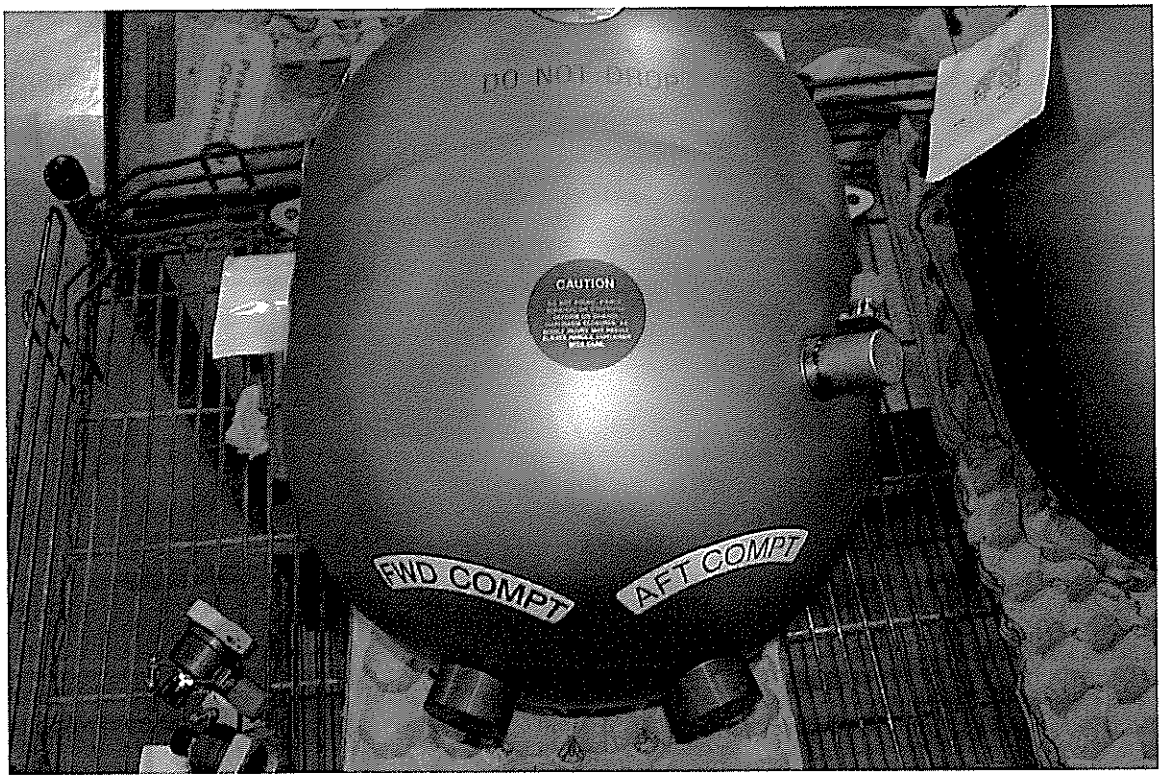
DO NOT DROP
CAUTION
FWD COMPT
AFT COMPT