Caltrain Positive Train Control (PTC) system

Notice of Product Indent

with

Appendix A – Concept of Operations (Rev. 1)

JULY 30 2010

Introduction

Caltrain has not yet selected a PTC system contractor and is unable to provide specific information relating to the PTC system and the development efforts needed of the contractor to implement and provide functionality required by Caltrain. Accordingly, Caltrain is submitting its PTC Notice of Product Intent (NPI) in advance of its PTC Development Plan which will be submitted within 270 days of the FRA approval of Caltrain PTCIP.

Specific required information is provided for each of the NPI clauses listed below:

§236.1013 (e)(1)to(5) Notice of Product Intent content requirements.

(1) Description of Caltrain Operations

Caltrain conducts operations along its peninsula corridor including regular and special event passenger services at speeds up to 79 mph at present service levels of 90 trains per day. The Caltrain peninsula rail corridor includes 52 route miles and 115 total miles of track extending from the San Francisco northern terminus located at 4th and King Streets to C.P. Lick located at ~M.P. 51.6. The Union Pacific typically operates six local freight trains per day on the peninsula between MP 3 and CP Coast and 12 local and through freights per day between CP Coast and CP Lick. Additional passenger services, involving Caltrain's tenant railroads (Amtrak, Caltrans/Capital Corridor and ACE Rail), are operated over the southern end of the corridor via the MT1 connection with the Union Pacific Railroad's Coast Subdivision between ~M.P. 44.6 and Diridon Station at ~M.P. 47.5. The tenant passenger railroads presently operate a maximum of 24 trains per day on Caltrain's rail corridor. All train operations within the area described above are controlled by Caltrain dispatchers.

Freight train services are operated on Caltrain's peninsula rail corridor by the Union Pacific Railroad at a maximum operating speed of 50 mph except 60 mph south of Tamien Station on MT1 transitioning to Union Pacific dispatch at CP Lick.

Caltrain's peninsula corridor mainline is two-track with passing sidings that briefly expands to four tracks near Bayshore (~M.P 5 to ~M.P. 7) and near Lawrence (~M.P 39.5 to ~M.P. 41.5). All mainline tracks are equipped with wayside color-light, bi-directional CTC block signaling. Mainline tracks on Caltrain's peninsula rail corridor are provided with coded track circuits providing effective mitigation against broken rails. Tracks that connect with Caltrain's mainline are protected by series connected track circuits and most have split point derails and a positive track gradient, any that do not will be upgraded before PTC is placed in service. Speed signaling is used north of the junction with UPRR's Coast Subdivision at ~MP 44.0. All operations are conducted in accordance with GCOR operating rules.

(2) Concept of Operations

Please refer to Appendix A, Caltrain PTC Concept of Operations

(3) Target Safety and Availability Performance

The Caltrain PTC system major functional subsystems include Cab, Field and Office equipment, which are specified to require a Mean Time To (or Between) Hazard Event of at least 10^9 hours. This Target Safety performance is dependent upon the following critical assumptions:

1. Application engineering is error free,
2. Safety critical data is error free,
3. Models of train behavior are sufficiently conservative to avert collisions,
4. Performance of systems and subsystems with which the Caltrain PTC system interfaces are not included as part of the Target Safety performance.

Availability requirements are also specified by elements or subsystems. The Caltrain PTC system Specification for (Reliability, Availability and Maintainability) includes requirements that address minimum levels of functional availability. This is covered by Mean Time Between Functional Failure (MTBFF) and assumes that redundancy and or diversity is provided to obtain the specified performance.

The Caltrain PTC system project specification section 21014 defines MTBFF as follows:

MTBFF is the mean time between failures that result in the loss of Caltrain PTC system functionality. If redundancy or other techniques are used to continue to provide the complete system/subsystem functionality after failure of an individual component occurs, then the failure shall not be counted as a functional failure. The MTBFF of an item is the ratio of the total operating time, *t*, accumulated by the total population of identical items, to the total number of functional failures occurring within the population of identical items during time *t*.

- Train Carried Equipment – MTBFF – 500,000 hours,
- Field Installed Equipment – MTBFF – 500,000 hours,
- Office Server Equipment – MTBFF – 500,000 hours,
- Individual Comm. Links – MTBFF – 1,000,000 hours,
- Office and Field UPS – MTBFF – 1,000,000 hours,
- Individual Office Servers – MTBF – 20,000 hours,
- Individual Office Workstations – MTBF – 10,000 hours,
- Individual Office LAN Equipment – MTBF – 50,000 hours,
- Individual EIC hand-held Terminal – MTBF – 20,000 hours.

It may be noted that certain Caltrain PTC system items are also required to provide reliability on an individual unit basis. These items are required to deliver reliability as measured by Mean Time Between Failure (MTBF) and are listed at the bottom of the list.

The Caltrain PTC system availability performance requirements are separate and distinct from those of the train carried equipment, wayside signal system, crossing warning systems and of the Rail Operations Control System.

Methods of contingency operations relative to subsystem failure modes are described in the Caltrain PTC Concept of Operations document, Appendix A.

(4) Description of the Caltrain PTC System Enforcement of Signals and Movement Authorities

The Caltrain PTC system is specified to require the System to evaluate inputs from the wayside signal system. Both the wayside signal display logic outputs and the fundamental inputs (e.g. occupancy detection, locking, switch correspondence and directional sticks) are evaluated to determine the most restrictive condition as per the inputs.

Restrictive and stop signal indications will cause the Caltrain PTC system to generate a series of speed - distance profiles, the last of which results in automatic braking to protect against overrun. The Caltrain PTC system is specified to require progressive audible and visual warning indicators to inform the locomotive Engineer of the need to control train speed to avoid an automatic intervention by the System. Warning and enforcement speed profiles are automatically adjusted to compensate for track gradient and also provide enforcement of permanent and temporary speed restrictions.

The Caltrain PTC system enforcement speed profile reaches zero at the Target Stop Location. The stop target point is located a sufficient distance from the restrictive signal to allow the train to be safely stopped at any point during a worst-case approach.

The Caltrain PTC system provides speed enforcement based on routes established via the CTC block signal system, including permanent speed restrictions, temporary speed restrictions and speed restrictions that correspond to the particular route and permitted speed over associated track switches.

When the train is within 200 feet of the end of its Movement Authority, “Target Stop Location”, the Caltrain PTC system allows the locomotive Engineer to transition out of supervised enforcement when the train is within sight of a restrictive signal and the train’s operating speed is at or below the limit of Restricted Speed (20 mph). When these conditions are satisfied the System permits the locomotive to command a transition to Restrictive Manual Mode whereby the train speed is capped at 20 mph. As soon as conditions allow the establishment of a new Movement Authority the Caltrain PTC system automatically transitions back to full Supervision Mode with audible and visual indicators provided to alert the locomotive Engineer of the return to full supervision.

Train Movement Authorities end at work zone limits defined by a “Form B”. Trains must be specifically authorized by the Employee In Charge (EIC) to pass into and through the work zone. The EIC function requires positive confirmation that modified Movement Authority restrictions are only provided to the specific train crew that was authorized by the EIC to enter the work zone. Other restrictive conditions within and

beyond the work zone that are set by inputs from the wayside signal system or Mandatory Directives will continue to be enforced. Thus the most restrictive speed is enforced.

(5) Description of PTC System Integration with Hazard Detectors

Caltrain has three (3) dragging equipment detectors located along the corridor. Caltrain's dragging equipment detectors are not integrated into the wayside signal control systems. Caltrain's dragging equipment detectors are standalone units that automatically produce a broadcast radio message that is received by train crews and the Dispatcher.

Messages are generated to indicate the non-existence or existence of dragging equipment whenever a train passes a detector. Operating rules require the locomotive Engineer to stop and inspect the train for dragging equipment whenever the radio transmission indicates that dragging equipment is detected; or when the train passes over two successive dragging equipment locations without receipt of the normally expected radio message.

Caltrain plans to retain the present dragging equipment detector and rules with its implementation of PTC. This provides consistency with existing rules and training and importantly serves to ensure that trains are stopped for dragging equipment inspections under the control of the locomotive Engineer as quickly as possible and at a safe and convenient location. This solution allows Caltrain to avoid an automatic emergency brake actuation and associated risks relating to the dragging equipment condition and action being taken to stop the train in an uncontrolled manner. The dragging equipment detectors will not be integrated into the Caltrain PTC system.

Caltrain employs bridge strike detectors at various low clearance underpass bridge locations. These hazard detectors are integrated with the wayside signal system. When the bridge strike detector is triggered the nearest signals governing movement over the bridge is put to Stop and Proceed and a "Bridge OK" light is extinguished. The bridge must be inspected and determined safe before the system is reset thereby restoring the display of permissive signals. Caltrain intends to continue to use this method of protection with its implementation of PTC. The wayside signals will display Stop and Proceed and the Caltrain PTC system will enforce the Stop on-board the locomotive or cab car.

Caltrain's central control facility has a seismic alerter that is connected to the UC Berkeley seismic detectors website. The seismic data (magnitude and location) is obtained from the seismic alerter and checked by the Supervisor or Manager of Caltrain's operations control center against the written Policy (provided as part of the FRA required Passenger Train Emergency Preparedness Plan) posted next to the seismic alerter equipment that informs what action, if any, is to be taken. Caltrain plans to continue with its current means of managing seismic hazards with implementation of PTC. The dispatcher will enter the appropriate speed restriction via ROCS and the restriction will be transmitted to the train and enforced as a Temporary Speed Restriction through the PTC system.

END

Appendix A
Caltrain PTC system
Concept of Operations
Rev. 1

CALTRAIN PTC SYSTEM

CONCEPT OF OPERATIONS (CONOPS)

JULY 2010

REVISION HISTORY

REV.	**DATE**	**COMMENT**
0	April 12, 2010	Issue for Caltrain PTCNPI Submittal
1	July 22, 2010	Updated for Caltrian PTCNPI wo/CBOSS

TABLE OF CONTENTS

1. INTRODUCTION 1

2. DOCUMENT OVERVIEW 3

3. CBOSS PROJECT OBJECTIVES 3

4. CBOSS SYSTEM OVERVIEW 4

5. APPLICABLE DOCUMENTS 7

6. EXISTING OPERATIONS AND SYSTEMS 7

6.1 TRAIN OPERATIONS 7
6.2 ROLLING STOCK 8
6.3 TRACK CONFIGURATION 9
6.4 CIVIL SPEED RESTRICTIONS 10
6.5 INFRASTRUCTURE 10
6.6 ENVIRONMENT 11

7. OPERATIONS AND SYSTEMS 12

7.1 OPERATIONAL POLICIES AND CONSTRAINTS 12
7.2 METHOD OF OPERATION 12
7.2.1 Track and Time Authorities 12
7.2.2 Track Bulletin System 13
7.3 DEFECT DETECTORS 13
7.4 ROLES AND RESPONSIBILITIES OF PERSONNEL 13
7.4.1 Train Crew 13
7.4.2 Train Dispatcher 13
7.4.3 Roadway Workers 13
7.4.4 Mechanical Department Maintainers 13

8. CBOSS OPERATIONAL CONCEPTS 13

8.1 OPERATIONAL POLICIES AND CONSTRAINTS 14
8.2 OPERATING METHODS 14
8.3 DATA AND CONTROL FLOWS 14
8.4 TRAIN CREW OPERATING DISPLAYS 16
8.5 TRACK DATABASE 16
8.6 DATA INTEGRITY AND VALIDATION 17
8.7 DATA SYNCHRONIZATION 17
8.7.1 Wayside to On-Board 17
8.7.2 CBOSS Back Office Server to On-Board 18
8.7.3 CTC Dispatch System to CBOSS Back Office Server 18
8.8 ROLES AND RESPONSIBILITIES OF PERSONNEL UNDER CBOSS OPERATION 18
8.8.1 Train Crew 18
8.8.2 Train Dispatchers (SCOs and MCOs) 19
8.8.3 Roadway Workers 19
8.8.4 Other Maintenance Personnel 19

9. CBOSS OPERATIONS 19

9.1 ON-BOARD SYSTEM INITIALIZATION 19

9.2 DEPARTURE TEST 20
9.3 TRAIN LOCATION DETERMINATION 20
9.4 MODES OF OPERATION 21
9.4.1 Supervision Mode 21
9.4.2 Block Signal Mode 21
9.4.3 Restricted Manual Mode 22
9.4.4 Intervention Mode 22
9.4.5 Cut-Out Mode 22
9.4.6 Cold Start 22
9.4.7 Self Test Mode 22
9.5 MODE TRANSITIONS 22
9.6 TRAIN MOVEMENT 27
9.6.1 Movement Authority 27
9.6.2 Wayside Signals 27
9.6.2.1 Approaching a Stop Signal 28
9.6.3 Approaching a Stop and Proceed Signal 28
9.6.4 Approaching a Signal with Unknown Indication (Dark) 28
9.6.5 Reverse Movements 28
9.6.6 Entry to CBOSS Territory 28
9.6.7 Exit from CBOSS Territory 29
9.7 WARNING AND ENFORCEMENT 29
9.8 SPEED LIMITS AND RESTRICTIONS 29
9.9 WORK ZONE PROTECTION INCLUDING MANDATORY BULLETINS 29
9.10 GRADE CROSSING APPROACHES 30
9.10.1 Constant Warning 30
9.10.2 Near Side Station Stop 30
9.11 MISCELLANEOUS FUNCTIONS 30
9.11.1 Station Stop Enforcement 30

10. CBOSS FAILURE MODES 31

10.1 WAYSIDE FAILURES 31
10.1.1 CP, Other Signal and Switch Related Failures 31
10.1.1.1 Complete WIU Failure 31
10.1.1.2 Failure of an individual WIU input or output 31
10.1.1.3 Failure of Switch Detection 32
10.1.1.4 Signal Lamp Out and Downgrade of Aspect 32
10.1.1.5 Track Circuit Failure 33
10.1.2 Grade Crossing Related Failures 33
10.1.2.1 Failure of Communication with Crossing Location 33
10.1.2.2 Failure of Override of Crossing Start 34
10.2 ON BOARD CBOSS FAILURES 34
10.2.1 Failure to Sustain the Limit of Movement Authority 34
10.2.2 Failure of On-Board CBOSS Equipment 34
10.2.3 Failure of Position Detection Function 35
10.2.4 Failure of Emergency Brake Prevention 35
10.2.5 Failure of Engineer's Display 35
10.2.6 Failure of On-Board Printers 35
10.2.7 Failure of On-Board Radio Communications 35
10.3 COMMUNICATIONS FAILURES 36
10.3.1 Wayside Data Network Failure 36
10.4 OFFICE SUBSYSTEM FAILURES 36
10.4.1 Failure of One Back Office Server (BOS) 36
10.4.2 Failure of All BOS Functionality 36
10.4.3 Failure of the Interface with ROCS 37
10.5 EIC EQUIPMENT FAILURES 37
10.6 EXTENDED CBOSS FAILURES 37

11. CBOSS IMPACTS ON OPERATIONS, RULES, AND PROCEDURES..... 37

12. INTEROPERABILITY 38

1. INTRODUCTION

This document describes the Concept of Operations for a PTC system to be supplied to the Peninsula Corridor Joint Powers Board (PCJPB) as an overlay signal system for improved safety and functionality for Caltrain commuter train operations.

Caltrain operates commuter rail passenger service throughout the peninsula corridor under the auspices of the Peninsula Corridor Joint Powers Board (PCJPB or JPB for short). In 1991 JPB purchased the (then) Southern Pacific right of way in San Francisco, San Mateo, and Santa Clara counties. The following year service was extended to Gilroy which is the current southern limit of passenger services. The northern terminal is at 4th and King Street in San Francisco where there are local connections to MUNI bus and streetcar services. Union Pacific retains limited rights to operate freight over JPB tracks and passenger service is operated and dispatched by Amtrak under contract to JPB. The dispatch center is located in San Jose at the CCF (Central Control Facility).

A total of 90 trains per calendar day now operate between San Jose and San Francisco in a mix of local, limited stop, and Baby Bullet express services. There are a number of service expansion plans in process including running more Caltrain services and additional Amtrak passenger services including Capitol Corridor and Coast Starlight trains, as well as Altamont Commuter Express at San Jose's Diridon Station. There are also plans to extend service across the Dumbarton Bridge into Alameda County. Electrification of the alignment is planned having developed the design of a 25 kVac system between San Francisco and CP Lick (south of San Jose) to a 35% level. This will enable the introduction of electric locomotive hauled services for Caltrain's existing passenger cars and state-of-the-art electric multiple trainsets to meet Caltrain's continually expanding service. Caltrain will transition to an EMU fleet when the existing rolling stock reaches the end of its useful life. The transition will be gradual however; a portion of the diesel fleet will be utilized to sustain certain express services. The EMU trainsets will enable significant operational benefits to be realized due to the EMU's higher acceleration and braking capabilities.

Caltrain is also a key link in the California High-Speed Rail (HSR) network; the Caltrain corridor forms the northernmost link for high speed trains to access downtown San Francisco. Accordingly, the Caltrain PTC system will be required to be interoperable with the train control system selected for HSR operation throughout the California High Speed network.

Freight train operations north of Santa Clara are typically limited to late evening to avoid interference with passenger operations. The trackage rights agreement provides for the introduction of temporal separation of freight and passenger operations. Freight operations will be time separated through the use of commands provided by the CTC system that will require additional keystrokes to allow freight trains to be routed onto Caltrain mainline tracks. It is also recognized that freight trains will be PTC equipped before Caltrain introduces its EMU rains into passenger operation.

Caltrain has a wayside signaling system with Control Points (CPs) spaced an average of two miles apart. Intermediate signals between CPs are located with an average of one mile or less separation. There are no cab signals and no positive stop or speed enforcement. The entire alignment is signaled for moves in both directions on all main

line tracks. There is a combination of two, three and four track configurations. All main line signal aspects are controlled through the rails using electronic coded track circuits (GE Electrocode) and DC track circuits over switches. The railroad operates under the General Code of Operating Rules (GCOR) with speed signaling north of CP Coast (beginning at MP44.0) and route signaling south of this milepost. The UP tracks south of CP Lick over which Caltrain operates morning and evening service are also equipped with route signaling. The majority of switch machines are electric but there are a number of air operated machines at the northern terminal in San Francisco.

Centralized traffic control utilizes a computer based dispatch system located at the CCF which communicates with the CPs through a mix of radio ATCS links and leased phone lines.

Throughout the alignment are a total of 46 highway grade crossings and 18 pedestrian crossings, mostly located at stations. All crossings use track-circuit based constant warning type devices to initiate the operation of gates and flashing light signals installed at these locations. The track-circuit based constant warning type devices are not compatible with the electrification and are scheduled to be replaced as part of that project. Although a final design decision has not been made at the time of writing, a scheme such as speed select or similar is assumed for the replacement warning system. The implementation contract for the Caltrain PTC system will stipulate an interface with the existing grade crossing warning system configuration. The Caltrain PTC system is required to be operable before major construction on electrification and/or high speed rail begins.

The original need for the Caltrain PTC system was for the safe separation of FRA compliant passenger rolling stock and future electrical multiple units. Operation of freight trains north of San Jose were to be temporally separated, freight would run only at night after the last passenger train and be clear of the Caltrain tracks before the first passenger train each morning. Operations south of San Jose were to be undertaken with the existing FRA compliant diesel hauled fleet as electrification was not planned for south of CP Lick.

The introduction by Congress of the Rail Safety Bill in October 2008, following the head-on collision between a Metrolink Commuter train and a UP freight train on September 12th 2008 at Chatsworth in Southern California resulted in a reappraisal of the Caltrain PTC project objectives. It is a requirement that all Caltrain trains must be equipped with a PTC system that is interoperable with the system selected by UP, Amtrak, ACE and other rail operators in and around the Caltrain corridor.

South of CP Lick, where only diesel hauled passenger services can operate, Caltrain trains must be equipped with a UP PTC interoperable signal enforcement system. The Caltrain PTC system will meet both of these interoperable objectives.

The definition of interoperable is taken to be that on-board PTC equipment on all trains can communicate with the wayside and office equipment of the territories in which the trains can operate (and, if necessary depending on final system design, between trains) and provide a base set of PTC functionality in enforcing speed limits and enforcing safe movement authority limits for each train.

2. DOCUMENT OVERVIEW

This concept of operations document is generally in conformance with the Institute of Electrical Engineers (IEEE) standard 1362-1998; Guide for Information Technology – System – Definition – Concept of Operations Document. It describes the Caltrain PTC system primarily from the user's perspective; the train crew. Limited descriptions of the technical workings of the system are provided where it supplements an understanding of observable system and subsystem behavior.

At the time of writing, the Caltrain PTC system functional and performance requirements are under development. The requirements have been circulated to industry, other users, and the FRA to foster a good understanding of the JPB's intent with respect to the implementation of a Positive Train Control system.

The organization of this document is as follows:

Section 2 provides an introduction to the Caltrain PTC system and its relationship to generic PTC systems, it also describes the history of the identification of the original need for the Caltrain PTC system and the need for mandatory implementation of PTC and the interoperability requirement with the PTC systems selected by the Union Pacific Railroad (UP) and other passenger train operators (which have yet to select a specific system). This section also describes the overall Caltrain operations.
Section 3 describes the Caltrain PTC project objectives.

Section 4 lists the Caltrain PTC system key elements. Currently no specific system architecture is assumed.

Section 5 lists all Applicable Documents

Section 6 describes the existing Caltrain operations and signaling systems

Section 7 describes the PTC Operational Concepts

Section 8 identifies specific impacts of the PTC system on Caltrain operations and the changes that will be made to accommodate them during installation, test, in-service, and revenue service operation of the system.

3. CALTRIN PTC PROJECT OBJECTIVES

Caltrain is now pursuing the implementation of a Positive Train Control type system that can be overlaid on the existing signal system to provide additional functionality and improved safety and operational performance. Freight trains, Amtrak, Capitol Corridor and ACE Train will be equipped with the UP selected PTC system and the Caltrain PTC system will be interoperable with the mandated safety functions delivered by PTC. UP (and the other Class 1 railroads in the United Stated) are developing a set of Interoperable Train Control (ITC) specifications that will be published by the AAR. ITC PTC will be implemented on a rapid schedule, a vital version of the Wabtec ETMS system, known as V-ETMS. Although freight may be temporally separated from passenger trains, interoperability of the Caltrain PTC system with V-ETMS is a prime objective of the project.

The Caltrain PTC operational concept is that all operating trains are provided with equipment that will continuously supervise the speed of the train and automatically intervene with a penalty brake application whenever train speed exceeds the "intervention" speed. This speed will be based on the train's movement authority taking into account the particular train's performance characteristics.

The Railway safety Improvement Act of 2008 mandates four key requirements for the PTC system to be implemented:

- Continuous Overspeed Enforcement
- Stop Signal Enforcement
- Work Zone Protection
- Protection of hand-throw switches

The Caltrain PTC system will be designed to include the continuous overspeed and stop signal enforcement, as well as work zone and roadway worker protection. The existing signal system currently protects all hand throw switches by linking them with a track circuit, this in turn protects the switch with the preceding signal. As the Caltrain PTC system will enforce all restrictive signals, the system will meet all four key requirements of the Act.

4. CALTRAIN PTC SYSTEM OVERVIEW

The Caltrain PTC system is a computer and communications based signal system that meets the requirements of mandated Positive Train Control (PTC) in that it enforces stop signal aspects and speed restrictions throughout the Caltrain Mainline territory. In addition it provides functionality to enforce scheduled station stops, enables near side station stops with grade crossing gates down time minimized, enforces Form B and other mandatory directives; it also includes other improvements for operations and maintenance of the Caltrain commuter rail system.

.

It will be interoperable with the PTC system selected by Union Pacific (and other freight and tenant passenger railroads) that will enable safe operation of commingled freight and passenger services. It is however the intent that freight services and passenger services will also be temporally separated north of San Jose. Commingling will only occur south of CP Lick where Caltrain services to Gilroy run on UP tracks. These services will be equipped with FRA compliant diesel push-pull equipment.

There is no intent to separate FRA compliant Caltrain rolling stock from EMU trains. The Caltrain PTC system will enforce safe separation between trains in Caltrain territory.

The Caltrain PTC system consists of wayside, office, and on-board elements that are linked together through a communications network that includes wireless networking with equipped trains on the Caltrain tracks. The wayside and central office system determine movement authorities for each equipped train, a movement authority consists of a safe point to which a train can travel, for example an absolute signal displaying a stop aspect. This is transmitted to the on-board PTC equipment which then enforces the stop aspect as well as other constraints between the train's current position and the limit of the movement authority including all speed restrictions, both permanent and temporary.

The Caltrain PTC system will consist of the following key elements:

- Cab – train based subsystem
- Field – wayside based subsystem located in existing (possibly new), trackside conventional signaling housings, or new ones where sufficient space for the new equipment is not available in existing rooms and enclosures
- Track – track based subsystem as needed for calibration and location determination
- Communication network – dedicated communication network that includes a wireless element for communication between the wayside and office subsystems with equipped trains in Caltrain territory
- Office – office subsystem located in the Central Control Facility (CCF)
- EIC – a portable subsystem for use by the Employee In Charge (EIC) of field work to implement a modification of train movement authority within limits defined in a Form B and other mandatory directives.

Figure 1; CALTRAIN PTC SYSTEM CONCEPTUAL ARCHITECTURE

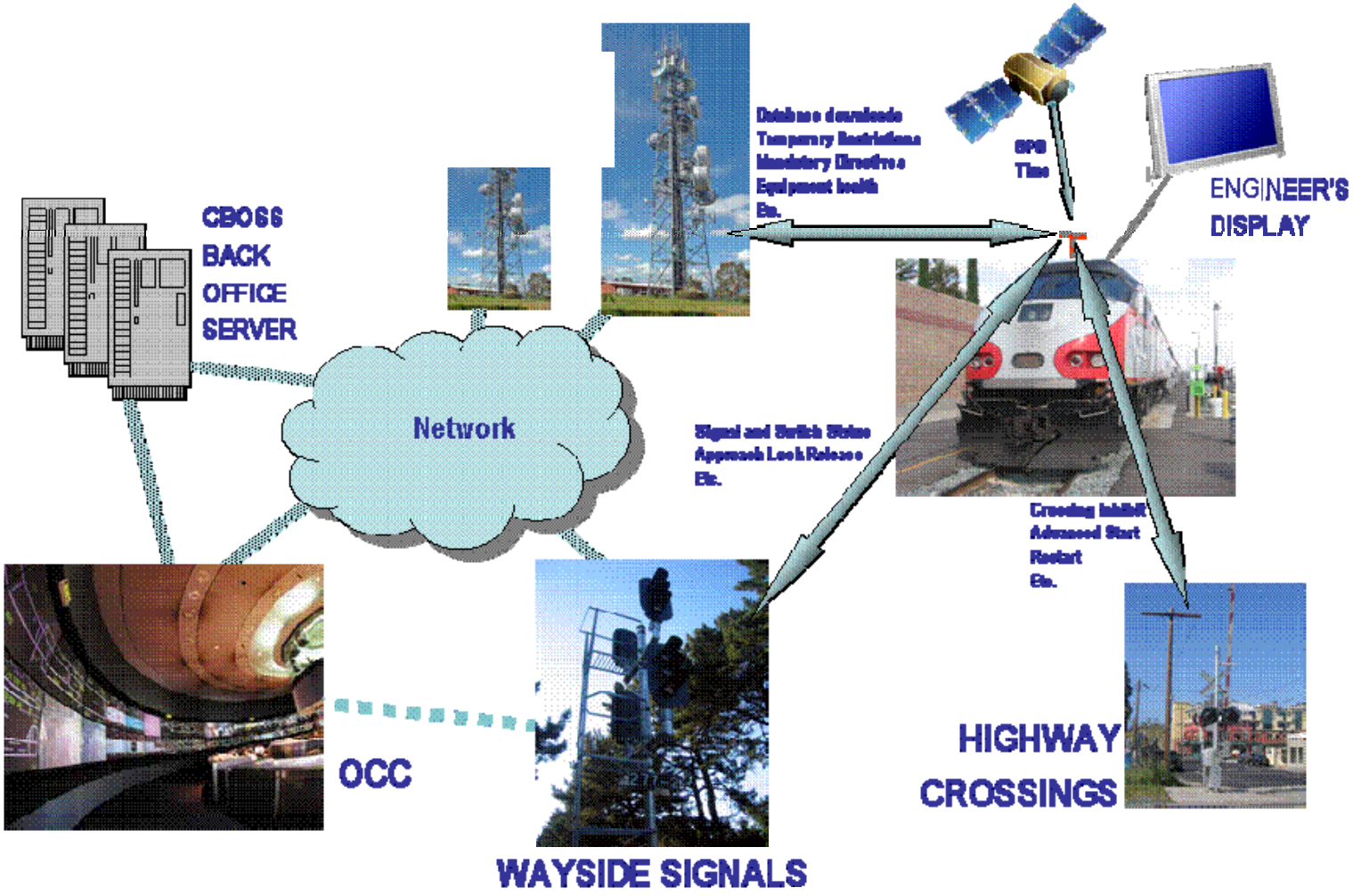

As the system design progresses to more details, this section of the CONOPS will be updated to include some of that detail.

Caltrain is in the process of replacing its Digicon office system. Requirements are being specified in that system for functions, user interfaces and interfaces to the future Caltrain PTC system itself. The new office system is designated the ROCS (Rail Operations Control System). The dispatchers will access PTC functions and information through the ROCS workstations, no separate dispatcher workstation will be provided for the Caltrain PTC system, although a maintenance workstation will be provided for System related maintenance and administration.

5. APPLICABLE DOCUMENTS

Unless otherwise identified, the latest edition of the following applicable documents is to be used:

- 49 CFR Parts 200 through 299 as applicable
- PCJPB Caltrain Railroad Safety Program Plan
- General Code of Operating Rules (GCOR)
- Caltrain Timetable (no. 3)
- Caltrain Railroad Safety Rules
- PTC Functional Requirements Specification
- PTC Technical Specification – Various Sections
- IEEE Standards
- IEC Standards
- AREMA Signals and Communications; Manual of Recommended Practices

6. EXISTING OPERATIONS AND SYSTEMS

The following tables describe the current configuration and operations as well as targeted operation post 2015 of the Caltrain system.

6.1 TRAIN OPERATIONS

2010
• Trains per day: 90 • Service Hours: 4:30 am to 1:32 am • Peak Hours: 6:00 am to 9:00 am, 4:00 pm to 7:00 pm • Headway: o Peak Hour: 6 min to 44 min o Non-Peak: 30 min to 1 hr 25 min o Local: 20 trains • Run Times (SF-SJD) o Express: ~60 min o Limited: ~1 hr 10 min o Limited/Local: ~1 hr 20 min o Local: ~1 hr 30 min • Freight services run intermixed with passenger services in off-peak times

6.2 ROLLING STOCK

Caltrain Operating Configuration
2010
• Diesel: push-pull o Operated on all trains o Configuration (typical): 5-car consist (1 locomotive, 4 trailer cars, 1 cab car) o Locomotive is always located on south end of train. Cab car is always located on north end of train.

Locomotive Fleet				
Operating Scenario	**Power**	**Year**	**Number**	**Manufacturer**
2010	Diesel	1985	18	General Motors-EMD
		1987	2	General Motors-EMD
		1998	3	Boise Locomotive, Inc.
		2003	6	Motive Power, Inc.

Passenger Car Fleet					
Operating Scenario	**Power**	**Type**	**Year**	**Number**	**Manufacturer**
2010	Diesel Loco	Trailer	1985	45	Gallery
			1986	9	
			1987	1	
			2000	14	
			2002	10	Bombardier
			2008	6	
		Cab Control	1985	21	Gallery
			1999	1	
			2000	5	
			2002	7	Bombardier
			2008	2	

CALTRAIN METHOD OF OPERATION
2010
• Manual operations per General Code of Operating (CTC) Rules • Manually controlled non-enforced station stopping • Station hold-out rule manually enforced by locomotive Engineer at stations with limited clearance platforms

CALTRAIN SIGNAL & CROSSING ACTIVATION SYSTEMS
2010
• Centralized Traffic Control • Wayside Block Speed Signaling (north of M.P. 44) • Wayside Block Route Signaling (south of M.P. 44) • Vital microprocessor CPs (GETS VLC) • Solid state D.C. coded vital communications and train detection (GETS Electrocode)

CALTRAIN SIGNAL & CROSSING ACTIVATION SYSTEMS
• Incandescent color light signals • Motion sensing audio frequency train approach predictors (GETS & Safetran) • Train horn activated crossings after station stop • No links to grade crossings to enable office monitoring of grade crossing system status and equipment health.

CALTRAIN OPERATIONAL COMMUNICATIONS
2010
• Mix of data radio ATCS and leased line links between office control system and CPs • Microwave network for key data communications (between CCF and mountaintops) to drive ATCS radio base stations and second voice channel base stations. • Leased lines used with ATT frame relay connections to link stations (Visual Message Signs, Public Address, Ticket Vending Machines) • Local CCTV at 4th and King and Diridon Stations only. • Stand alone office control system dispatching trains on Caltrain property, no external links to other dispatching systems. • Voice radio channels for Road (1 channel/simplex), Maintenance (1 channel duplex), and Yard (1 channel duplex)

6.3 TRACK CONFIGURATION

TRACK
• Caltrain operates on a total of 77.2 miles from San Francisco to Gilroy o Joint Powers Board (JPB) owned and dispatched: 51.7 miles between San Francisco (MP 0.2) and San Jose - CP Lick (MP 51.9) o Union Pacific Railroad (UPRR) owned: San Jose – CP Lick (MP 51.9) to Gilroy (MP 77.4) • ~108 track miles used in revenue service (SF to CP Lick)
Current 2010
• Mix of dual-track, controlled sidings, and four track sections. • Controlled Sidings at Millbrae and two in Redwood City: total 4.57 miles • 4-track sections in Bayshore and Lawrence: total 16.35 miles • San Francisco Terminal: 12 tracks • San Jose Terminal: 12 tracks

VEHICULAR CROSSINGS AND RAILROAD (SAN FRANCISCO TO SAN JOSE DIRIDON)
• At-Grade: 45 at-grade vehicular crossings • Railroad Bridges o Over local streets: 34 o Over waterways: 20 o Vehicular Bridges (JPB owned): 5 • Grade crossing improvements: o Project underway to improve safety at San Mateo County grade crossings by adding items such as sidewalks, fencing, guardrails, pedestrian swing gates, tactile pads and readjusts of pedestrian gate.

PEDESTRIAN AND EMERGENCY CROSSINGS (SAN FRANCISCO TO CP LICK)
• Grade crossing improvements: o Project underway to improve safety at San Mateo County grade crossings by adding items such as sidewalks, fencing, guardrails, pedestrian swing gates, tactile pads and readjusts of pedestrian gate.
Current 2010
• At-Grade: 56 total o 34 at stations o 20 with vehicular crossings • Overpasses o 2 JPB owned o 3 county or city owned • Underpasses o 9 JPB owned o 1 county or city owned

LOCATION AND CONFIGURATION OF TRAIN YARDS
Current 2010
• San Francisco 4th/King station o trains stored in depot • CEMOF o Trains stored in storage tracks 1 through 4

TRACK MAINTENANCE PROGRAM
Current 2010
• Caltrain track and ROW are maintained by Amtrak, per Caltrain Operating Agreement between Amtrak and JPB, dated Nov 1, 2001. Current agreement expires June 30, 2011. o Amtrak to maintain designated passenger and freight tracks that are owned by JPB, Gilroy and Tamien layover facilities, and CEMOF facility. o Amtrak is not responsible for maintaining UP trackage, such as from CP Lick to Gilroy • All tracks to be maintained for safe, reliable passage of trains per FRA, CPUC, and JPB standards and regulations. • Main tracks to be inspected at least once every 72 hours.

6.4 CIVIL SPEED RESTRICTIONS

Maximum Line Speed of 79mph is imposed along the complete right of way.

6.5 INFRASTRUCTURE

TUNNELS (SAN FRANCISCO TO SAN JOSE DIRIDON)
• 4 tunnels in service: total length 8,814 ft / 1.67 miles • 1 tunnel not in service: length 1,086 ft

VEHICULAR CROSSINGS AND RAILROAD (SAN FRANCISCO TO SAN JOSE DIRIDON)
• At-Grade: 45 at-grade vehicular crossings • Railroad Bridges o Over local streets: 34 o Over waterways: 20 o Vehicular Bridges (JPB owned): 5 • Grade crossing improvements: o Project underway to improve safety at San Mateo County grade crossings by adding items such as sidewalks, fencing, guardrails, pedestrian swing gates, tactile pads and readjusts of pedestrian gate.

STATIONS & PLATFORMS (SAN FRANCISCO TO SAN JOSE DIRIDON)
• Stations o 32 stations from SF to Gilroy o 26 stations from SF to SJ Diridon
Current 2010
• San Francisco Terminal o Platforms: 6, 16 ft wide • San Jose Terminal o Platforms: 3, ~22 ft wide • 5 stations have hold-out rules

INDUSTRIAL SIDINGS/SITES
• Quint St. Lead (CP 3.1) – to Port of SF serviced by the UPRR. • Carrol St. Lead (CP 3.8) • Sierra Point Lumber Spur (CP 5.0) • South San Francisco East and West Yards (East: CP 8.2, West: CP 8.6) • UPRR Redwood Junction Industrial Lead (CP 26.2 and CP 26.8) • Pine Cone Lumber Spur (CP 40.0) • Calstone Lead (CP 40.9) • Butterhouse Lead (CP 41.4) • UPRR Coast Subdivision and Newhall Yard (approx CP 44.7) • Warm Springs Subdivision (CP 46.5 and CP 47.2) • UPRR Vasona Industrial Lead (CP 47.8)

6.6 ENVIRONMENT

The JPB owns and operates approximately 52 miles of primarily two-track mainline railroad right-of-way between the 4th and King Street Station in San Francisco and south of the Tamien Station in San Jose, Santa Clara County. Between Tamien Station and Gilroy, the mainly single-track right-of-way is owned by the UPRR. Caltrain has trackage rights with the UPRR to provide commuter service in this approximately 25-mile segment.

Caltrain trains consist of diesel locomotive-hauled, bi-level passenger cars. As of November 2009, Caltrain operates 45 northbound and 45 southbound (for a total of 90) trains per day between San Jose and San Francisco.

In addition to Caltrain commuter rail service, the UPRR operates approximately three daily freight trains between Santa Clara and San Francisco, as part of a “Trackage

Rights Agreement" with Caltrain. From Santa Clara to San Jose, on a joint use corridor, UPRR operates approximately 12 to 20 daily freight trains. Three passenger train services also operate on the Santa Clara to San Jose segment: Capitol Corridor (15 daily trains), ACE (8 daily trains), and the Amtrak Coast Starlight (2 daily trains).

The CBOSS system is being implemented on the existing railway infrastructure.

7. OPERATIONS AND SYSTEMS

The Caltrain Right of Way is equipped with a conventional incandescent color light based signal system. North of CP Coast, the system is speed signaling, south of CP Coast the system is route signaling. A Computer Aided Dispatching system located at the Central Control Facility in San Jose is used by the Supervisors of Commuter Operations (SCOs or dispatchers) and the Managers of Commuter Operations (MCOs) to supervise the movement of trains, locomotives and employees on the Caltrain Right of Way. Caltrain dispatchers also control the movements of UP, Amtrak ACE, and Capitol Corridor trains north of CP Lick. The majority of non-Caltrain movements between CP Lick and CP Coast take place on the UP owned track MT1. North of CP Coast, UP trains operate on the main Caltrain tracks MT1 and MT2.

The current method of operations requires employees to observe and comply with signal indications, authority limits, mandatory directives, and speed limits to provide a safe operating environment.

7.1 OPERATIONAL POLICIES AND CONSTRAINTS

Operations on Caltrain are governed by the General Code of Operating Rules, Special Instructions, the Timetable, General Orders, and Bulletins.

7.2 METHOD OF OPERATION

All trains movements on Caltrain are conducted under Centralized Traffic Control (CTC). The CTC system is located within the CCF at San Jose. Currently, there is no automatic cab signaling, automatic train stop, nor automatic train control on Caltrain territory. Caltrain main line tracks are all track circuited.

Trains must proceed based on the signal aspect displayed in a particular signal unless given specific instruction by the dispatcher or authorized field representative. Switch and signal controls are sent to the field from the CTC office system in response to SCO or CTC requests. Switch, signal, and track circuit state indications are transmitted to the CCF and displayed on the CTC machine. Non-vital composition and checking of commands and controls is done in the CTC system, vital checking of signal and switch control requests is conducted in the field. The vital signal system cannot be overridden by the non-vital CTC system.

7.2.1 Track and Time Authorities

SCOs and MCOs can grant track and time authorities to trains, locomotives, or employees authorizing occupation of a track or tracks within physical limits and specified times. Track and Time Authorities must be recorded by the requesting employee on the correct form and the details repeated over the radio or telephone to the SCO. Upon successful repeat of the details, the SCO will give the OK time for the authority to begin. Track and Time Authorities must be released when the train, locomotive, or employee is clear of the limits.

7.2.2 Track Bulletin System

The Track Bulletin System provides the SCO with the means to issue information to operating crews concerning conditions they may encounter enroute as well as rule and regulation changes when necessary.

7.3 DEFECT DETECTORS

The Defect detector system consists of wayside dragging equipment detectors and bridge impact detectors. There are 3 sets of dragging equipment detectors located at MPs 11.2, 28.2, and 41.9. When a train passes over a dragging equipment detector, a radio message is broadcast over the voice radio road channel to the engineer which can also be heard by the SCOs and MCOs. If the dragging equipment detectors are activated, the message is changed from no defect appropriately.

In some locations, a number of low bridges are equipped with impact detectors, if activated by a bridge strike, the signals governing movement across the bridge, are set to stop.

7.4 ROLES AND RESPONSIBILITIES OF PERSONNEL

The current roles and responsibilities for personnel who will be affected by the deployment of CBOSS are described as follows:

7.4.1 Train Crew

The general direction and government of a train is in the charge of the conductor and all persons employed on the train subject to his/her instructions. The Engineer is in charge of the locomotive and responsible for the proper handling of the train.

7.4.2 Train Dispatcher

The train dispatchers (SCOs) and their managers in the CCF (MCOs) are responsible for supervising the safe and efficient movement of trains locomotives, roadway workers, and machines on the main and siding tracks.

7.4.3 Roadway Workers

Roadway workers are responsible for the maintenance of the physical plant including track, structures, switches, and signals. Roadway workers must obtain authority from the dispatchers before occupying or fouling a main or siding track to perform work.

Signal and communications maintainers are responsible for maintaining the wayside and office located equipment and grade crossing warning systems.

7.4.4 Mechanical Department Maintainers

Mechanical Department maintenance personnel are responsible for the inspection, overhaul, and repair of all rolling stock including locomotives, passenger cars, work locomotives, and work cars.

8. PTC OPERATIONAL CONCEPTS

The key PTC operating concepts are described in the following sections.

8.1 OPERATIONAL POLICIES AND CONSTRAINTS

PTC operations on Caltrain will continue to be governed by the General Code of Operating Rules. The Timetable, Other Caltrain Rules and Procedures as modified to integrate PTC operations with the current day to day Caltrain operations.

The areas for rule and procedure modification are identified in Section 11.

8.2 OPERATING METHODS

Caltrain PTC methods of operation will be overlaid on the existing primary method of operating which is CTC. The Caltrain PTC system will enhance the existing methods of authorizing the movement of trains, locomotives, roadway workers and machines on the main tracks. There will be no change to the operations within yards.

Some significant changes are anticipated with respect to the rules governing the Engineers' response to signal aspects. The Caltrain PTC system will enforce stop and stop and proceed aspects together with speed limits; permanent and temporary, between the train's current position and the limit of its movement authority, typically a stop or stop and proceed signal.

The Caltrain PTC system provides an enhanced level of operational safety over the existing systems by displaying to the train crew a current authority governing distance to go to stop and enforcing speed limits both permanent and temporary along the way. The Caltrain PTC system will continuously monitor train speed and compare it with the maximum speed allowed at all points on the main line. In the event of an impending overspeed, the System will provide the Engineer with a warning and in the event that the Engineer does not respond appropriately, the System will intervene and enforce compliance with the speed limit and prevent the movement authority limit from being exceeded.

For example, the flashing yellow over Red/Red indicates advance approach. Caltrain existing rules require the engineer to be prepared to stop at the second signal AND to begin reducing speed to limited or less as soon as the head end of the train passes the signal. PTC enforcement in Supervision mode may not require the train to slow until nearer to the stop signal. In this case, the Engineer would follow the on-board PTC indication over that of the wayside signal aspect.

The Caltrain PTC system will also be able to detect changes in conditions before the train crew, in these cases, the rules will also change allowing train crews to respond to the on-board PTC indications.

The Caltrain PTC system will enforce the most restrictive of all speed limits in force at any time or location.

8.3 DATA AND CONTROL FLOWS

The Caltrain PTC on-board subsystem continuously receives and assimilates operational data from a variety of sources including wayside locations, the CCF, and various sensors on the train itself to dynamically construct the limits of the envelope in which safe train movement can occur. The Caltrain PTC system provides precise measurement of train position, speed, and distance to target stop points and speed restriction limits.

If PTC failures are present, the System will employ fail safe logic to restrict train speed and limits of movement to ensure that the train operates safely.

Figure 2; CALTRAIN PTC SYSTEM Data Flows

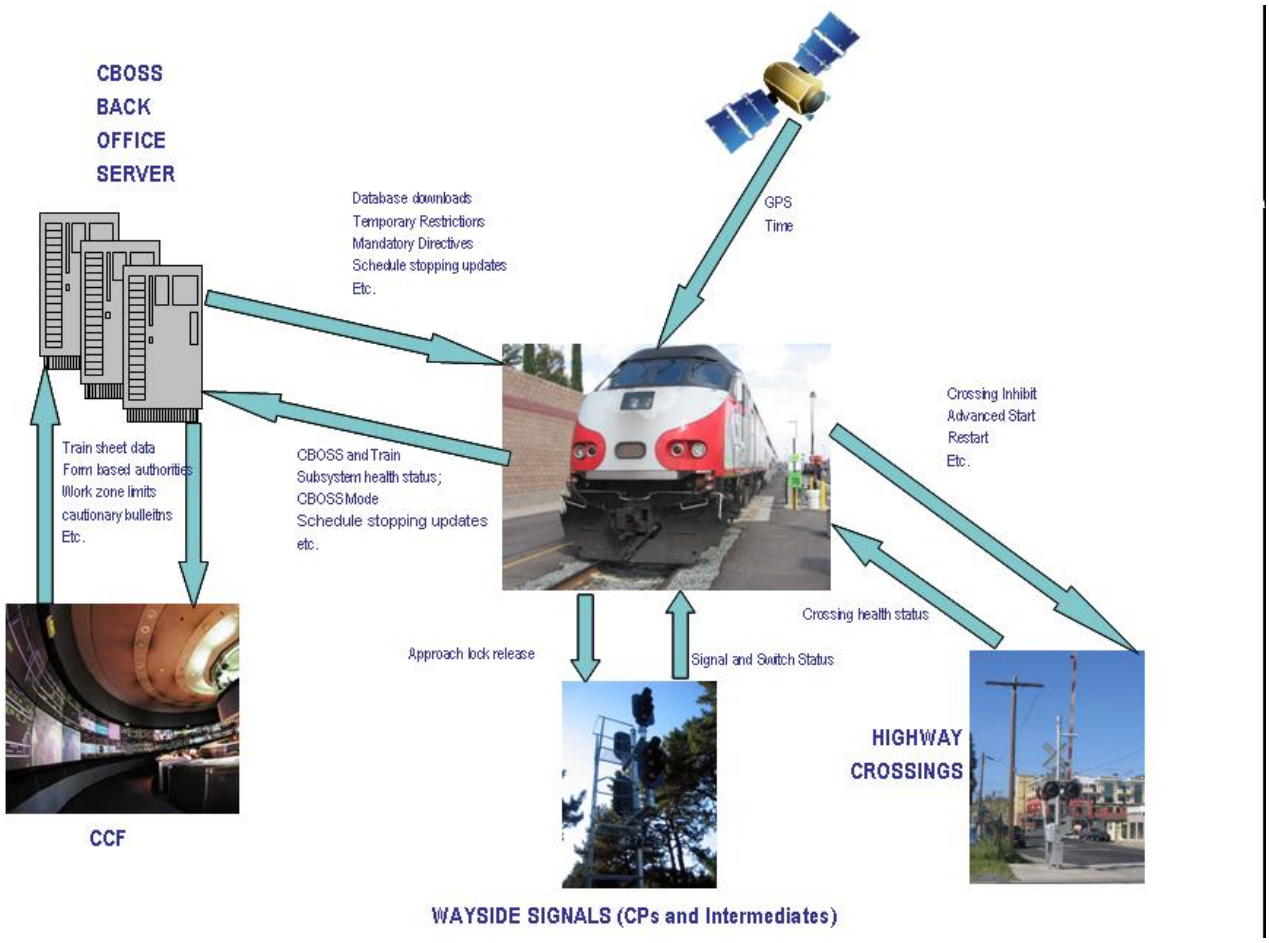

8.4 TRAIN CREW OPERATING DISPLAYS

In fully operational state (Supervision mode), the Caltrain PTC system will display to the Engineer, current speed and speed limits (both permanent and temporary), location, proximity to track features, and any mandatory directives that are current and govern movement of the train within the limit of the display's range.

A combination of graphics, icons, and text will be used to display safety (e.g. speed limits) and non-safety related (e.g. next station stop) to the Engineer.

8.5 TRACK DATABASE

The PTC database consists of a set of descriptions of PTC territory. The Caltrain PTC system uses the navigational (train position) functions and relates position to the database to fulfill the various Caltrain PTC system functions. The database contains permanents elements, such as civil speed limits, and dynamic elements such as temporary speed limits.

Primary database elements include:

- Geographic location of track sections
- Gradient and curvature
- Permanent speed limits (civil limits)
- Location and type of wayside signals
- Location of virtual signals
- Location and configuration of switches (including fouling points)
- Location of Mileposts
- Location of station platform limits (including platform face side)
- Location of highway and pedestrian grade crossings

Configuration management of the PTC database aboard each equipped train is fulfilled by the PTC Back Office equipment. During initialization of each PTC equipped train, the Back Office equipment uploads, updates, and/or verifies that the initialized train has a current and accurate database on-board. This verification must be successfully achieved before the train can operate in a PTC mode.

The same upload, update, and verification process must also be achieved with PTC systems from other tenant railroad operates before they can be authorized to operate over Caltrain tracks.

Caltrain manages a strict process for control of dynamic changes to the railroad infrastructure. This process will be expanded to include the management and assurance that the PTC track database is current and accurate. The process will involve compliance with the procedures by the personnel responsible for infrastructure change management through the use of authorized tools.

8.6 DATA INTEGRITY AND VALIDATION

The Caltrain PTC system will rely upon the exchange of critical data messages through radio networks that must be interoperable to other rail operators within North America; as such the radio networks are effectively open to the public.

8.7 DATA SYNCHRONIZATION

A key safety requirement of the Caltrain PTC system is that operating data is tightly synchronized as trains move through Caltrain territory under PTC supervision. The Caltrain PTC system employs diverse means of detecting data synchronization errors and delays and ensures that the system adopts the appropriate restrictive state depending on the error.

8.7.1 Wayside to On-Board

Data exchanges between the wayside and on-board PTC subsystems require a defined rate of refresh. This message exchange process is highly dynamic as the train moves and wayside elements can change state frequently. The communication link must be capable of supporting high data rates. The refresh and rebroadcast rates are set in order to achieve the target levels of safety of the System. Upon receipt, authentification, and validation of a fresh data set, the PTC on-board subsystem will discard the stored data element and replace it with the new one. Failure of the on-board PTC subsystem to receive fresh validated data within a defined time period will result in a data

synchronization error state and causes the System to assume that the affected data is in the most restrictive state and will respond accordingly.

8.7.2 PTC Back Office Server to On-Board

The frequency of synchronization of data between the BOS and on-board is less frequent than between the wayside and on-board however there is a need to determine from time to time that the database held on-board is up to date especially updates of temporary restrictions entered by the SCOs and MCOs and for any Form B and track and time entries. An exchange of data will be required from time to time that will enable the on-board system to determine if its database is current with the BOS.

In the event that data synchronization cannot be achieved, the on-board PTC equipment will restrict train movement in PTC Supervision mode until a subsequent positive synchronization can be achieved.

Such synchronization errors will not be specifically visible to the train crew however an indication will be given to the crew that PTC Supervision mode is not available. Synchronization errors will be visible to the maintenance personnel who can interrogate on-board subsystems by means of the PTC maintenance terminal(s) located at the CCF.

8.7.3 CTC Dispatch System to PTC Back Office Server

Operational data for all trains operating in Caltrain territory is generated by the dispatching system. Data such as schedule, station stopping patterns, and mandatory directive data is delivered from the dispatching system and transmitted to the BOS for the PTC system to enforce. In order to ensure that mandatory directives and other operational data remain synchronized between the two systems, a strict message discipline is required. This is needed to minimize synchronization errors but at the same time ensure detection of errors that do occur.

In the event that the message exchange protocol is violated and there is the possibility that data has been lost, there is the possibility that the System is unable to enforce mandatory directives, temporary speed restrictions, and other safety related functions. The PTC system must therefore enter a more restrictive state if the BOS to dispatch system data link is compromised.

When such a condition is cleared and data synchronization reestablished, the PTC system can automatically resume normal mode of operation.

8.8 ROLES AND RESPONSIBILITIES OF PERSONNEL UNDER PTC OPERATION

Changes to the roles and responsibilities of railroad personnel affected by the deployment of the Caltrain PTC system are described in the following section.

8.8.1 Train Crew

The introduction of PTC will not substantially change the responsibilities of the train crew; there will be some changes to rules with respect to wayside signals and the way in which a train is operated, with the PTC system taking priority over wayside signal aspects. The Caltrain PTC system will introduce a higher level of safety into the railroad operation, at the same time providing benefit in terms of schedule and station stop accuracy adherence.

The train crew will have new responsibilities to observe and operate the train in accordance with PTC display indications and to cut-in, cut-out, initialize and operate the on-board PTC subsystem in accordance with the modified rules, procedures, timetable and special instructions related to PTC operations.

8.8.2 Train Dispatchers (SCOs and MCOs)

The introduction of PTC does not change the responsibilities of the SCO or MCO. It does provide them with additional tools with which to control train movements and to enforce mandatory directives, and to receive more information about the operation of trains on the railroad.

8.8.3 Roadway Workers

The introduction of PTC does not essentially change the responsibilities of roadway workers. The Caltrain PTC system will give the Employee In Charge of roadway work the ability to communicate from a handheld device in the field with the on-board PTC equipment to allow trains to move through a Form B area under their control. These same handheld devices will also enable the EIC to communicate with the SCO through the BOS and dispatching system to request changes to a Form B and other mandatory directives. This will increase the level of safety associated with mandatory directives and the data exchange will be in addition to conventional voice radio communication and significantly reduce the risk of miscommunication and therefore of mistakes.

8.8.4 Other Maintenance Personnel

Signal and communications maintenance personnel will have additional responsibility with the addition of the PTC wayside equipment. They will also be responsible for maintaining the interfaces between the PTC equipment and the conventional wayside signal system and the additional radio equipment in the field. Other forces will be needed to maintain the additional PTC equipment in the CCF, CEMOF and at the backup control center at San Carlos.

Changes will be experienced for the mechanical department with the maintenance of locomotives and cab cars. Safety critical on-board PTC equipment, data radios and additional sensors will be maintained by others. Personnel responsible for the maintenance of the on-board PTC equipment will now come under the hours of service regulations that to date have only affected signal construction and maintenance personnel.

Equipment and system components that fail will be replaced to restore service and then returned to the factory or certified repair/maintenance facility for work by others.

9. PTC OPERATIONS

The following sections describe the functionality of the Caltrain PTC system.

9.1 ON-BOARD SYSTEM INITIALIZATION

Prior to full PTC enforced operation on an equipped locomotive or cab car, the on-board PTC subsystem must be initialized. Upon successful completion of initialization, the on-board PTC subsystem will have obtained and verified the integrity of the on-board functions and operational data that is specific to the actual train. Initialization may be initiated by the train crew when the train is stopped prior to starting a run. It will be possible for the on-board subsystem to be initialized enroute.

The following functions are performed as part of the on-board PTC initialization:

- Verification that the train is using the current (infrastructure or vehicle) database(s) during initialization of the cab equipment at the commencement of a trip. If the database(s) are not current then they must be brought up to date prior to enabling operation in Supervision mode,
- Transmission of all current Form Bs and other Mandatory Directives to the train as part of the initialization process,
- Configuration of the train as a passenger or work train.

9.2 DEPARTURE TEST

The Caltrain PTC system allows the train crew or other qualified employee to initiate a self test of the system. The frequency, location, and necessity to conduct such a test will be defined in the PTC sections of Caltrain's operating rules and procedures.

PTC on-board equipment, components or functions which cannot be checked when the system is operational (actively engaged in support of train movement) will be capable of being checked by an Engineer action when the train is stopped by transitioning the equipment to the Self-Test mode. The self tests are used for checking and determining the equipment/system status conditions however they are not the means by which the system achieves its safety performance requirements.

When PTC equipment in the On State is placed in Self-Test mode and testing initiated, test results are cumulatively displayed on the Operator's Display in the cab. The following results are displayed:

- Results that indicate a condition that suggests or indicates a safety related failure shall be displayed in bold RED text with yellow highlight with the words "Safety Issue" followed by a plain language description of the action to be taken.
- Results that indicate a condition that suggests or indicates a non-safety related failure shall be displayed in bold YELLOW text with brown highlight with the words "Availability Issue" followed by a plain language description of the action to be taken.
- Results that indicate a condition that is informational in nature shall be displayed in bold GRAY text with black highlight with the words "For Information" followed by a plain language description of the condition

Test results are retained in memory until the equipment maintainer implements component or configuration changes or in response to the maintainer's command input to reset stored test results data. All test results along with the associated hardware and software configuration data are retained in the Test Results Log.

9.3 TRAIN LOCATION DETERMINATION

The train's position is a fundamental function of the on-board equipment. Position is determined through the input to the on-board electronics unit from a variety of sensors including GPS, tachometers measuring wheel rotations and other equipment. Upon initialization, the equipment will utilize GPS positioning data in conjunction with other devices that will confirm both location along a track, and also which track the train is on.

In the event of a failure of one or more of these sensors components, a manual input maybe required by the Engineer, the use of which will be strictly governed by procedure.

Once position is established, the PTC system will update the train's position relative to the on-board database by incrementing data from the differential GPS and the other sensors including the tachometers. In the absence of GPS signal, such as when the train is operating through each of the four tunnels at the north end of the Caltrain RoW, the on-board system will use the tachometers and other sensors for a defined period of time and/or distance.

Determination of train position when moving through switches will be augmented by the on-board systems knowledge of the position of the switches which is transmitted from the CPs to approaching PTC trains. In the absence of switch status, train position must be reconfirmed in a similar manner to that described above under initialization before operation in full PTC Supervision mode can resume.

9.4 MODES OF OPERATION

This section describes the various modes of operation of the Caltrain PTC system. The intent is that Supervision mode is the prime operating mode of the System and as far as possible is the default of all the modes. For example, if the train is being operated in Restricted Manual mode on the main line, when the system detects that the System is again able to establish a valid movement authority, the on-board PTC subsystem will automatically transition from Restricted Manual into Supervision mode.

9.4.1 Supervision Mode

Supervision mode is the primary and default mode for operations conducted on the main lines. In this mode train movement is protected against overspeed in respect of permanent and temporary speed restrictions. The Caltrain PTC system will enforce Mandatory Directive limits that identify temporary, and work zones restrictions. The Caltrain PTC system enforces the stopping of a train at a signal displaying a STOP aspect and will stop a train before entering a track circuit that becomes occupied prior to the PTC equipped train's arrival or in the event that a hand-operated switch is not positioned for safe train movement. This mode is automatically entered when inputs to the Caltrian PTC system result in generation of a Movement Authority for the train.

9.4.2 Block Signal Mode

Block Signal mode provides a means of contingency operations resulting from failure conditions that do not allow the establishment of a PTC enforceable Movement Authority for the train. The Caltrain PTC system enforces civil speed limits when the train retains the ability to detect its location. Movement Authority limits other than civil speed limits will not be enforced and the train will be operated by the Engineer in accordance with specific failure mode rules in conjunction with wayside signal aspects. If the train does not retain the ability to detect its location the train will be operated by the Engineer in accordance with specific failure mode rules in conjunction with wayside signal aspects.

When trains are operating through a CP, the PTC system must enforce the more restrictive of speed limits, for example; the PTC system must safely assume that the speed limit for movement through the crossover or turnout route must be enforced as in this mode the on-board subsystem has no knowledge of the position of the switches.

9.4.3 Restricted Manual Mode

Restricted Manual mode allows trains to proceed past wayside signals at STOP or other constraints limiting a PTC Movement Authority. Restricted Manual mode is also used for operating within yards. The Caltrain PTC system enforces speed supervision limiting the train speed to "Restricted Speed".

9.4.4 Intervention Mode

Intervention mode is entered when the train, in Supervision, Block Signal, and Restricted Manual modes exceeds the movement authority or mode speed limits or when the train for whatever reason experiences an emergency brake application. Intervention mode is characterized by a brake application, either a full service or an emergency application.

9.4.5 Cut-Out Mode

Cut-out mode is not a specific mode of the PTC system but of the operation of an equipped train with PTC on-board equipment cut out by means of a sealed switch that is operated by the Locomotive Engineer. The Caltrain PTC system is not operational in cut out mode for such trains; the train is constrained purely by the physical characteristics of the train's performance and by the control commands of the Locomotive Engineer.

9.4.6 Cold Start

Cold start is not strictly a mode but is a state of the on-board PTC subsystem and is the initiation point for the Caltrain PTC system when the Engineer opens up and powers on the Cab equipment. Upon start up, the Caltrain PTC on-board equipment be in Cold Start up state and waits for the Engineer to initiate entry to the Self Test mode by operating a push button on the console or possibly on the CBOSS display.

9.4.7 Self Test Mode

Self Test mode is the mode in which the on-board PTC system runs a set of internal self checks to verify that the system is fully operational. Upon successful completion of the self-test, and provided that the train has a valid movement authority the on-board PTC subsystem will enter Supervision mode. If the train does not have a valid movement authority, for example the train is in a yard, on-board PTC will with a successful completion of the self-test indicate this to the locomotive Engineer along with the available operating modes for selection. To subsequently operate the train within the Yard, the Locomotive Engineer must switch the PTC system to Restricted Manual mode.

If the tests are not successful, then on-board PTC subsystem will revert to Cold Start state and a maintenance action must be initiated.

Status of the self tests and the results will be indicated on the Locomotive Engineer's PTC display.

9.5 MODE TRANSITIONS

The Caltrain PTC system has a number of operational modes; each mode has a set of functions that the System can execute. The transitions between these modes are dependent on the operational status of the system and its subsystems, some transitions are automatic, including reactions to system and subsystem failures, other transitions are implemented by means of a Locomotive Engineer action through controls on the PTC train display or cab console.

The following diagram and tables describe the features of each operating mode and the events, actions, and constraints that determine the various transitions between each mode.

The following table refers to the modes and transitions diagram at the end of this document.

A shaded cell:

Indicates that this transition is not allowed directly, this transition must be accomplished by a combination of transitions.

PTC Operating Mode Transition Table

	MODES		
TRANS-ITION ID#	**FROM**	**TO**	**CONDITIONS**
A	SUPERVISION	INTERVENTION	• Train overspeeds or • Train runs past Movement Authority Limit Target Stop Location (speed exceeds zero) or • Movement authority pulled back causing train to overspeed (wayside failure, signal cancellation) or • PTC failure (loss of position, timeout of communications with wayside, total on-board PTC failure, etc.)
B	INTERVENTION	SUPERVISION	• Train stops and • Movement authority established for train
C	SUPERVISION	RESTRICTED MANUAL	• Train is stopped and • Train Engineer selects Restricted Manual mode by operating momentary switch
D	RESTRICTED MANUAL	SUPERVISION	• Valid movement authority received by train (transition is automatic does not require Engineer action)
E	INTERVENTION	CUT-OUT	• Train Engineer operates switch in cab by breaking seal and moving switch to Cut-Out position

	MODES		
TRANS-ITION ID#	**FROM**	**TO**	**CONDITIONS**
F	CUT-OUT	INTERVENTION	• Train Engineer moves cut-out switch back to PTC position and train does not have a valid Movement Authority
G	SUPERVISION	BLOCK SIGNAL	Not allowed directly
H	BLOCK SIGNAL	SUPERVISION	• Train receives valid movement authority and • Train remains within the constraints imposed by the movement authority (not overspeed etc.)
I	BLOCK SIGNAL	INTERVENTION	• Train exceeds civil limits (if train can determine its location) • PTC failure (loss of position)
J	INTERVENTION	BLOCK SIGNAL	• Train is stopped and • On-board PTC equipment is healthy including validated position and • No communication between on-board and wayside PTC and • Train Engineer selects Block Signal mode using momentary console mounted switch
K	SUPERVISION	CUT-OUT	• Train Engineer operates switch in cab by breaking seal and moving switch to Cut-Out position
L	CUT-OUT	SUPERVISION	• Train is stopped and • Train has valid movement authority and • Train Engineer moves cut-out switch to PTC position
M	RESTRICTED MANUAL	INTERVENTION	• Train exceeds restricted speed
N	INTERVENTION	RESTRICTED MANUAL	• Train is stopped and • Train Engineer selects Restricted Manual mode by operating momentary switch

	MODES		
TRANS-ITION ID#	**FROM**	**TO**	**CONDITIONS**
O	RESTRICTED MANUAL	CUT-OUT	• Train Engineer operates switch in cab by breaking seal and moving switch to Cut-Out position
P	CUT-OUT	RESTRICTED MANUAL	Not allowed directly
Q	BLOCK SIGNAL	RESTRICTED MANUAL	• Train is stopped and • Train Engineer selects Restricted Manual mode by operating momentary switch
R	RESTRICTED MANUAL	BLOCK SIGNAL	• Train is stopped and • On-board PTC equipment is healthy including validated position and • No communication between on-board and wayside PTC and • Train Engineer selects Block Signal mode using momentary console mounted switch
S	BLOCK SIGNAL	CUT-OUT	• Train Engineer operates switch in cab by breaking seal and moving switch to Cut-Out position
T	CUT-OUT	BLOCK SIGNAL	Not allowed directly
U	SELF TEST	INTERVENTION	• PTC equipment passes self test and • Train does not have a valid Movement Authority
X	COLD START	SELF TEST	• Train Engineer keys up operating cab and • Train Engineer presses self test switch
Y	SELF TEST	SUPERVISION	• PTC on-board subsystem passes self test and • Train has valid movement authority

Caltrain PTC System Operating Mode Transition Diagram

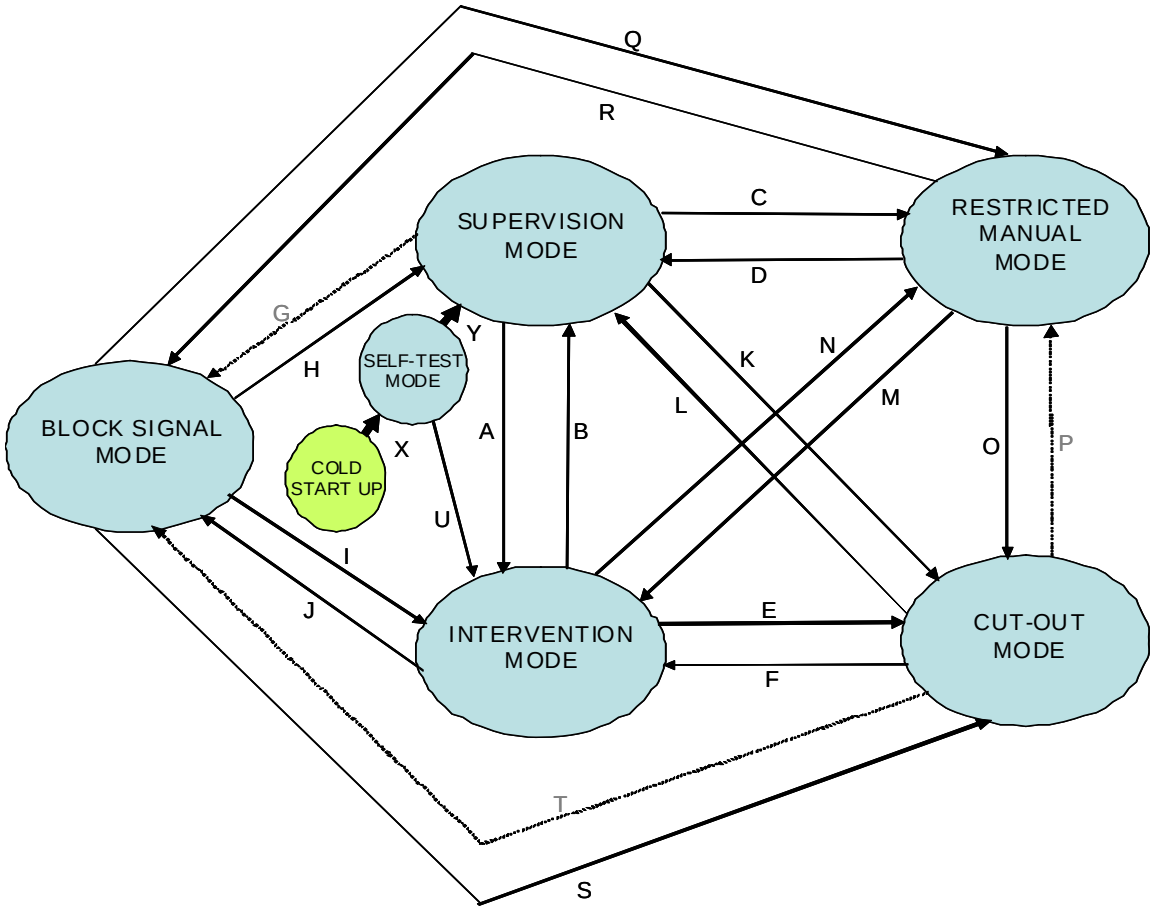

Conceptual Operator's Conceptual Switch Layout

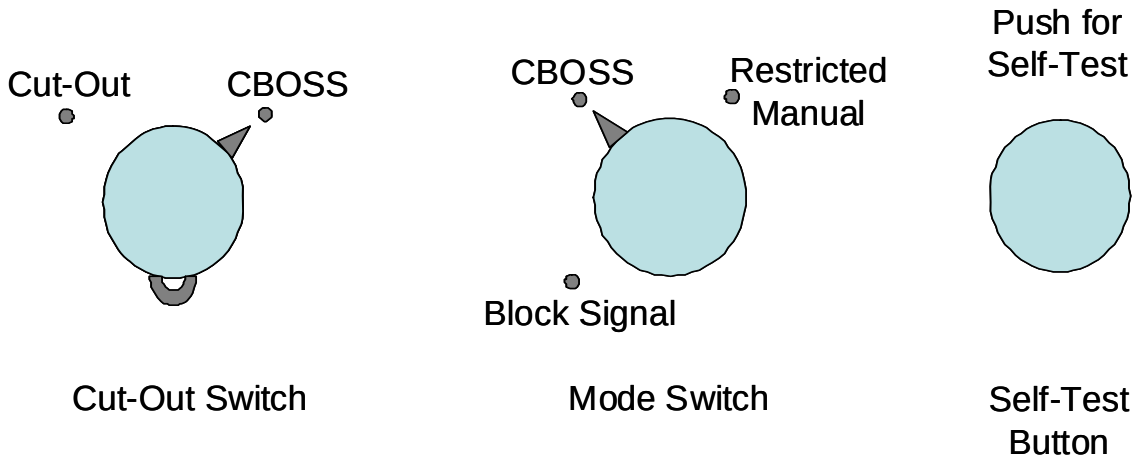

The cut-out switch is a two position switch with a seal when the switch is in the PTC position. To move the switch to the Cut-out position, the seal must be broken. This switch will be located in the Engineer's cab but outside of normal reach from the Engineer's position.

The mode switch is a three position switch; the normal position of the switch is in the mid (PTC) position. The other positions are momentary contact and spring loaded to ensure that the switch will return to the mid position after turning. It is mounted on the console or possibly a soft switch or key on the PTC Engineer's touch screen display.

The self test button is a momentary push button located on the console or a soft button on the PTC Engineer's touch screen display.

9.6 TRAIN MOVEMENT

The various operating constraints and therefore limits on train movements under PTC supervision are described in this section.

9.6.1 Movement Authority

Each PTC train in Supervision mode is subject to operating within the limits of a Movement Authority generated by the on-board PTC equipment from knowledge of the status of wayside equipment including signals and switches, of the database elements describing permanent and temporary speed limits, of the status of mandatory directives held by the BOS, by end-of track and other physical limits to train operation, and by the operational characteristics of each train type including acceleration and braking capabilities.

The movement authority is displayed to the Engineer in terms of distance to go to an enforcement point as well as the physical limit of movement. The Movement Authority is enforced in terms of intervention if the train exceeds the speed limit at any time, and if the train exceeds the braking curve down to a stop at red signal.

In the event of an overspeed, the Caltrain PTC system will activate a visual and audible warning to the Locomotive Engineer. This must be acknowledged by a response to slow the train to keep the speed below the speed/distance limits established by the on-board PTC subsystem. In the event that the Engineer does not slow the train sufficiently, the PTC on-board equipment will enter Intervention mode and apply the brakes which will enforce the train to a stop. The intervention rate is different depending on the constraint defining the limit of the Movement Authority. If for example, a train violates the allowed speed and enters Intervention mode while approaching a stop signal, a full service brake application will be automatically initiated and if the full service brake application fails to sufficiently reduce the train speed below the intervention speed limit then the Caltrain PTC system will automatically request an irrevocable emergency brake application to safely stop the train.

9.6.2 Wayside Signals

The Caltrain PTC system enforces Movement Authorities in accordance (in addition to other constraints such as speed limits) with wayside signal status. If a signal is displaying any aspect other than stop or stop and proceed, the Movement Authority will

enforce a speed limit based on distance to go to an absolute stop limit, the permanent speed limit or the temporary speed limit (whichever is the more restrictive).

Where signal aspects under the current rules require trains to be reducing speed as they pass the signal, the rules revised under PTC operation will require the Engineer to follow the PTC display in the cab. The vital nature of the Caltrain PTC system ensures safe operation.

Where a signal upgrades from stop to a less restrictive aspect as the train approaches in mid block, the Locomotive Engineer will also follow the PTC indication and if allowed to do so can accelerate up to the defined limits shown on the PTC display.

9.6.2.1 Approaching a Stop Signal

The Caltrain PTC system enforces a safe operating speed distance profile between the train's current position and a signal displaying a stop aspect. The Engineer observes the speed limits provided by the PTC in-cab display and aided by visual and audible prompts for reducing and increasing limits, and controls the speed of the train by applying the brake and throttle controls appropriately. In the event that the train approaches the PTC limits an initial warning will be given that will allow the Locomotive Engineer to control the train speed below the prescribed target. If the Locomotive Engineer does not respond sufficiently, PTC will apply an irrevocable emergency brake application.

9.6.3 Approaching a Stop and Proceed Signal

The Caltrain PTC system enforces the stop in the same manner as that for a stop signal. Once the train stops, PTC will allow the Locomotive Engineer to select Restricted Manual mode by switching the mode selector momentarily to the RM position and releasing it and allowing it to return to the PTC position. The Caltrain PTC system enforces a maximum of Restricted Speed. Once a signal ahead is detected by PTC as being less restrictive than Stop or Stop and Proceed, and there are no other trains detected between the train's position and the signal, the Caltrain PTC system will generate an updated and extended movement authority and automatically returns to Supervision Mode allowing the train to be operated at the appropriate speed within the Movement Authority.

9.6.4 Approaching a Signal with Unknown Indication (Dark)

The Caltrain PTC system enforces the most restrictive condition, though not in the event of a failure of a signal lamp that mearly downgrades to the wayside signal aspect to avoid the display of a more permissive or irregular aspect. As the Caltrain PTC system enforces only "stop" and "restricting" aspects, if the Caltrain PTC system knows the dark signal to be the result of a lighting circuit output loss or blown lamp, the Caltrain PTC system will allow the Locomotive Engineer to operate the train at the appropriate speed.

9.6.5 Reverse Movements

The Caltrain PTC system enforces a maximum speed of 20 MPH on any reverse train movements.

9.6.6 Entry to CBOSS Territory

Upon approach to Caltrain PTC territory, the cab display provides a visual and audible alert to the approaching territory boundary. The boundary is demarked with a wayside

signal which is the first signal enforceable by the Caltrain PTC system. Any database upload from the wayside/office subsystem is accomplished well before the train reaches a service braking distance from the signal. The Caltrain PTC system will display a Movement Authority to the signal and begin to enforce speed restrictions; both permanent and temporary, that exist immediately beyond the signal in Caltrain PTC territory.

9.6.7 Exit from Caltrain PTC Territory

As the train approaches an exit point from Caltrain PTC territory, the cab display will provide a visual and audible alert. The Caltrain PTC system enforces the permanent and temporary speed limits up to the boundary with non-Caltrain territory. Once beyond the boundary, the Caltrain PTC display will indicate that the train is no loner in Caltrain PTC territory and will advise the Locomotive Engineer to follow the appropriate operating rules for the new territory.

9.7 WARNING AND ENFORCEMENT

The Caltrain PTC system provides both visual and audible warnings when a train approaches all speed limits, including zero limits at stop and stop-and-proceed signals. Allowance is made within the system implementation to provide sufficient warning to assist the Engineer to control a train and experiencing nuisance system interventions. In the event that the system determines that a stop point can only be protected by an emergency stop, the on-board PTC equipment commands an irrevocable emergency brake application.

In the case of a stop signal, once the train stops, the on-board PTC subsystem will allow the Locomotive Engineer to select Restricted Manual mode and proceed. In the case of a stop-an-proceed signal, CBOSS cab will allow the Engineer to select Restricted Manual mode and proceed when the train is at or below Restricting Speed and within 200 feet of the signal.

9.8 SPEED LIMITS AND RESTRICTIONS

The Caltrain PTC system enforces permanent speed restrictions determined by comfort speed plus allowable tolerances for curves and turn outs coded into the database. Further restrictions in the form of temporary speed restrictions are input as updates to the database through the ROCS system interfaced to the PTC office equipment. PTC office equipment then transmits the updates to PTC equipped trains for enforcement.

9.9 WORK ZONE PROTECTION INCLUDING MANDATORY BULLETINS

Work zone and other mandatory bulletin limits are entered into the ROCS by the dispatchers (SCOs) and transmitted across the interface to the PTC office subsystem. The information associated with the bulletins and work zones are transmitted from the PTC office subsystem to PTC trains and EIC portable equipment. On board, the bulletins are printed out in the active cabs and also stored in CBOSS cab computer equipment. The limits of the work zones and bulletins are then input to the on-board database and enforced in terms of speed limits and entrance blocks.

The EIC of the work zone is notified as trains approach their area of responsibility. If an authorization for a train to enter the protected territory is established by the EIC via the portable EIC equipment; the revised authorization is displayed on the ROCS workstation and the Caltrain PTC system releases the work zone limit stop enforcement to the

affected train. The train may then move through the work zone or between bulletin limits governed by a speed limit set by the Employee In Charge and any permanent and temporary restrictions as defined by other mandatory directives and conditions set by the wayside signal system.

Upon completion of the work and once personnel and equipment are clear of the track, the EIC indicates the released status by means of the portable PTC equipment and the SCO releases the work zone and bulletin by input to the ROCS workstation.

9.10 GRADE CROSSING APPROACHES

The Caltrain PTC system allows grade crossing warning approaches to be modified in two ways:

9.10.1 Constant Warning

Grade crossing warning times are activated by means of conventional constant warning devices. In the event that a Caltrain PTC equipped train approaches a grade crossing, the warning system is activated by means of the Caltrain PTC system on-board equipment communicating with the grade crossing equipment house. In the event that communication cannot be established, the Caltrain PTC system enforces a speed limit on the train that matches the design approach speeds for the conventional crossing warning system. The crossing itself will be activated by the conventional track-based equipment.

This function allows higher speed Caltrain PTC equipped trains to activate the crossings without need to modify the constant warning time wayside equipment.

9.10.2 Near Side Station Stop

Where there is sufficient distance between a station and the grade crossing at the departure end, the Caltrain PTC system will enforce the station stop within safe limits and allow the grade crossing warning system to not activate (gates remain up) until the train has completed its station dwell and is ready to depart.

When ready to depart, the Engineer activates a switch on the PTC control panel in the cab which starts the crossing warning system and allows the train's movement authority to extend beyond the grade crossing.

9.11 MISCELLANEOUS FUNCTIONS

9.11.1 Station Stop Enforcement

The ROCS transfers train schedule information across the interface to Caltrain PTC office subsystem. The Caltrain PTC office subsystem then communicates the station stop schedule to each train in the territory. The Caltrain PTC on-board equipment will then enforce each station stop in a non-vital manner subject to any limits that must be established vitally including a signal at stop at the departing end of a platform or near side station stop for a grade crossing.

In the event of a train exceeding the enforcement speed, the Caltrain PTC system will impose a service brake application and force the train to slow allowing the Locomotive Engineer to regain control of the train and make a normal station stop. If, in the course of this non-vital enforcement, a vital enforcement is required, appropriate visual and

audible warnings will be given by the on-board PTC equipment to the Locomotive Engineer and if necessary an automatic brake intervention will occur.

10. PTC FAILURE MODES

The following are the identified failure modes of the Caltrain PTC system and a description of the operational effect and means of recovery. In this section, some of the effects of a failure are the subject of assumptions and analysis is required during the system detail design phase to determine the requirement for certain Rules and Procedures, when design mitigation is determined to be impracticable. Failure mode recovery strategies will be dependent on design details of the implemented Caltrain PTC system.

10.1 WAYSIDE FAILURES

10.1.1 CP, Other Signal and Switch Related Failures

10.1.1.1 Complete WIU Failure

With the complete failure of a WIU a train approaching the location, (CP or intermediate signal) will be unable to determine the status of the signal, switch or train occupancy detection equipment. The on-board equipment will therefore determine the wayside status to be at its most restrictive; that is the signals will be at stop or stop and proceed. On-board PTC will enforce the train to stop at the next signal or track circuit boundary that is interfaced to the failed WIU.

In the event that the PTC failure occurs while the train is within the enforcement zone for the signal, then PTC will request an automatic brake application.

The complete failure of a WIU that interfaces with grade crossing equipment will result in the application of a crossing approach speed restriction covering the area where conventional track based approach detection equipment is employed. PTC on-board equipment shall enforce any required speed reduction for an approaching train to the maximum speed permitted by the design of the conventional track based train approach detection equipment. Failure of the crossing WIU while the train is on the approach will result in continuation of the activated crossing warning system,

10.1.1.2 Failure of an individual WIU input or output

Individual inputs and outputs of WIUs are required to be implemented in a fail safe manner whereby the system detects the failure or otherwise processes the status condition resulting in a restrictive system response. The restrictive response will be similar to that of the complete WIU failure described above but with less of an overall impact, i.e. fewer trains will be affected.

If a WIU output fails, PTC will interpret the status of the device as the most restrictive; for example a signal will be treated as being at stop. The stop will be enforced by PTC and the Locomotive Engineer will observe an enforced stop but could be looking at a clear signal. Block Signal mode would be selected by the Locomotive Engineer when the wayside signal is found to display a permissive aspect and when authorized by the

Dispatcher in accord with (new) Rules and Procedures to enable temporary movement under CTC Rules. Once past the device, the Caltrain PTC system will typically receive data for a valid movement authority and automatically transition to Supervision mode.

If the WIU output fails, for example the advance activation of a train moving at a speed above that for which the GCP is designed to support, a similar event as described above will occur but only for a specific piece of infrastructure as opposed to all infrastructure that interfaces with the WIU.

10.1.1.3 Failure of Switch Detection

The failure of switch detection could result from two different events; the first and most likely case is a failure of the detection itself in which case the home signal will be at stop and PTC will enforce the stop. The other case will be a failure of the interface between the switch detection circuit and PTC, possibly a WIU input failure. In either case, PTC shall enforce the stop of an approaching train at the home signal. A WIU input failure will be characterized by a situation whereby the wayside signal displays a permissive aspect, in which case the Locomotive Engineer may with authorization temporarily transition to Block Signal mode to continue the journey. Again, when the train passes beyond the device and when a valid movement authority is established the train shall automatically return to Supervision mode.

In the case of actual loss of point detection or switch correspondence, the wayside signal displays an absolute STOP or STOP and Proceed indication. In this case, the movement shall be protected by the same means that are employed today. The Caltrain PTC system will enable the Restricted Manual mode to be activated by the Locomotive Engineer and will limit the operating speed to 20 mph while the train remains in this operating mode. The Locomotive Engineer will activate the Restricted Manual mode when authorized by the Dispatcher to do so and will be required to follow all relevant Rules and Procedures to protect the movement of the train. The Caltrain PTC system will automatically return to Supervision mode when the train is passed the device and when a valid movement authority is established.

It is currently understood that ITC (PTC) will require an input from the Engineer once the train has moved over a switch in an underdetermined position. The Caltrain PTC specifications require the on-board system to automatically confirm the train's location to mitigate the risk of human error in designating an incorrect CP exit location. As such trains equipped with Caltrain PTC equipment will be able to recover and resume operation in Supervision mode without Locomotive Engineer input. If transponders are only used in Caltrain PTC territory, and the UP does not provide them in their PTC territory then a manual means of Locomotive Engineer input will be needed in order to restore location determination when operating in UP territory or manual operations must be conducted until location determination is automatically restored.

10.1.1.4 Signal Lamp Out and Downgrade of Aspect

If the signal downgrades due to a lamp out condition, then as long as the aspect remains less restrictive than stop, there will be no operational impact on the Caltrain PTC equipped train as only stop indications will be enforced. PTC/ITC equipped tenant railroad trains would continue to operate as they do today when faced with a downgraded aspect and operate according to the revised aspect.

10.1.1.5 Track Circuit Failure

When the Caltrain PTC system detects an occupied track circuit this will result in an enforced stop of the train. If the failure is with the WIU input the wayside signal will typically display a permissive aspect. The Engineer will be provided access to the Block Signal mode and with authorization from the Dispatcher will proceed over the track circuit following CTC Rules. The Caltrain PTC system will automatically return to Supervision mode when the train is clear of the track circuit and a valid movement authority is established.

If the track circuit is in an occupied state (indicating an occupancy or failure condition) PTC will enforce the stop of the train at the signal governing entrance to the occupied block. The Caltrain PTC system is then enabled to transition to Restricted Manual mode and with authorization from the Dispatcher is permitted to move through the occupied block at Restricted Speed. When the train is clear of the occupied block and a valid movement authority is generated Caltrain PTC equipped trains shall automatically return to Supervision mode.

The Caltrain PTC system is specified to permit a transition to Restricted Manual or Block Signal mode when the train is within 200 feet of the Target Stop Location and the speed is at or below Restricted Speed, though Dispatcher verbal authorization is required to permit this transition.

10.1.2 Grade Crossing Related Failures

10.1.2.1 Failure of Communication with Crossing Location

Bi-directional communication is required between train and crossing. As a Caltrain PTC equipped train approaches the crossing it will send a command to inhibit actuation by GCP equipment and another command to actuate the crossing warning equipment when the train is (nominally) 30 seconds from arriving at the crossing based on its operating speed and provided that the train's limit of movement authority extends beyond the crossing. If the train is scheduled to stop at a near side platform, and the Caltrain PTC system confirms that the virtual signal at the far end of the platform is at stop and is being enforced, the Caltrain PTC system will sustain the inhibit of GCP actuation and withhold its command to actuate the crossing warning equipment keeping the gates up as the train enters the platform and stops.

Sustained communication is required to maintain the inhibit of GCP approach detection. Failure to maintain communication shall cancel the inhibit and allow actuation of the crossing via the GCP equipment. The immediate impact is that the crossing warning system is actuated via the GCP as it is today resulting in near side crossing actuation when an approaching train stops at the platform, times out and then re-actuates when the train departs the station. Other impacts resulting from communication failure depend upon whether the train is approaching the crossing at a speed above that for which the GCP system was designed and when the failure occurs. If it occurs before the train approaches the crossing, the on-board Caltrain PTC enforces a train approach speed that is consistent with the GCP application design. If there is a near side station stop, the gates and lights will activate as they do today and will release when GCP motion detection confirms the train has stopped. To restart the gates when the train is ready to depart the existing whistle mike or activation by pulling forward slowly to the crossing to trigger motion sensing or by island track circuit occupation is required. If communication

is failed with the crossing, the restart command entered into PTC by the Locomotive Engineer will not operate.

If communication is lost after the advanced start has been sent, the crossing will already be activated. The design shall sustain actuation for the (nominal) minimum warning time of 30 seconds as this will preserve warning sufficiently to allow transition to the GCP system or arrival at the crossing and positive actuation by the island circuit.

10.1.2.2 Failure of Override of Crossing Start

When an override message is sent to the crossing, the default situation must be that the warning system activates and the gates come down. This is undesirable but is consistent with the current operation. Once the train has stopped then the Motion Detector will release the warning system after the time-out period. The restart of the warning system at the end of the dwell will then require the Engineer to press the crossing restart button on the panel and if that does not cause the warning system to restart, then the whistle mike or island circuit must be used.

10.2 ON BOARD PTC FAILURES

10.2.1 Failure to Sustain the Limit of Movement Authority

Wayside signal system status and train location information correlated with the infrastructure database are among the data required to sustain the Limit of Movement Authority. Loss of the WIU, WIU inputs, wireless communications, train location or speed sensing or processing to correlate the train location relative to the infrastructure database as well as access to the back-office-server that maintains mandatory directives containing movement restrictive conditions shall result in cancellation of the movement authority. In this event, the train will be unable to move from its present location with the protection of Supervision mode. If the limit is lost while the train is moving, PTC will enter Intervention mode. Once stopped the Engineer must report the event and receive instructions from the Dispatcher about resuming operation. The Caltrain PTC system provides Restricted Manual mode to support movement of the train till the Engineer can observe a permissive wayside signal at which point the Engineer would normally transition to Block Signal mode. When status information is available allowing a valid movement authority to be established the Caltrain PTC system automatically returns to Supervision mode.

10.2.2 Failure of On-Board PTC Equipment

Failure of the on-board PTC equipment impacts continued PTC operation of the train in different ways depending upon the specific failure. This section analysis will consider a full failure of the on-board package. It is likely that the on-board package will be redundant and as such a complete failure has a very low probability of occurrence.

If the on-board equipment fails, the ability to prevent a penalty brake application will be lost and an emergency application will occur. At the same time, the Locomotive Engineer’s display will cease to display information. Once the train has stopped, if the failure condition remains, the Locomotive Engineer will not be able to select Restricted Manual or Block Signal mode of operation as this requires some functionality in the on-board PTC subsystem to operate. Continued operation of the train will require the Locomotive Engineer to seek permission from the Dispatcher to select Cut-Out and proceed under (CTC) rules.

10.2.3 Failure of Position Detection Function

If PTC on-board loses the capability to determine train position with the required level of accuracy and confidence, the System will enter Intervention Mode. The Locomotive Engineer must seek authorization from the Dispatcher's to resume operation; the most likely mode will be in Restricted Manual and then Block Signal mode as these modes do not require position to be known. The train will continue until either position is restored, in which case the Caltrain PTC system will automatically revert to Supervision mode. At the end of the train journey corrective action will be required before the train can be returned to passenger service.

10.2.4 Failure of Emergency Brake Prevention

If the Caltrain PTC on-board equipment loses the ability to prevent an emergency brake application, the train will be stopped. Although the Caltrain PTC system will appear to be fully functional, if it is unable to prevent the emergency brake application, resumption in Cut-Out mode is provided by PTC to isolate its influence over the emergency brake.

10.2.5 Failure of Engineer's Display

The Locomotive Engineer's display is critical to PTC operation, if the display fails, then the Locomotive Engineer is required to enter the Cut-Out mode which shall establish conventional means of train speed indication.

If the display fails, the PTC system will continue to enforce the wayside stop signals, speed restrictions, Work Zones, Virtual Signals etc. but without the display the Engineer will not be able to precisely control the speed of the train without running an increased risk of Intervention. Lacking availability of a functioning display unit the Rules are anticipated to require the Engineer to slow the train significantly, or even stop either immediately (using a service brake application) or at the next station in order to avoid an emergency brake application by PTC. The Caltrain PTC system is specified to provide audible cues to the Locomotive Engineer that inform of the need to adjust train speed which should help to avoid intervention.

Once stopped, the Locomotive Engineer must seek authorization from the Dispatcher to continue in Cut-Out mode.

10.2.6 Failure of On-Board Printers

If an on-board printer fails to function this will not have an automatic effect on continued operation under PTC enforcement. Rules governing the conveyance of hand copied Mandatory Directives to the Locomotive Engineer shall be applied as they are today.

10.2.7 Failure of On-Board Radio Communications

Train radio communications are expected to include diverse technology and be supported by redundant equipment, particularly as relates to the over-the-road data radio network. The current concept is that a communications controller will select between the 220 MHz over-the-road network radio equipment and WiFi network radio equipment when trains are located at dispatch locations (yards or terminals). The WiFi network allows much greater data throughput, enabling infrastructure database updates and transmission of Mandatory Directives data to be made when necessary and without

over burden of the 220 MHz network or long delays in completing the database updates. The 220 MHz network does support these functions.

Loss of data access via the WiFi network will impact operations in that trains will be delayed in downloading any required database updates or Mandatory Directives. This impact should be rare in that loss of availability will have to coincide with the need for a database update which should also be a fairly rare occurrence.

Loss of the on-board over-the-road radio network communications, due to the failure of equipment, should be rare due to redundancy. However, when such a loss occurs PTC will be unable to generate valid movement authorities for the train during the course of its journey. The Caltrain PTC system provides Block Signal mode as a contingency for this rare occurrence that allows temporary movement in accordance with CTC block signal rules and procedures.

10.3 COMMUNICATIONS FAILURES

10.3.1 Wayside Data Network Failure

The operational users of PTC are the Locomotive Engineers and the Dispatcher(s). Communications are required to enable certain functionality and the conveyance of information to the users. Loss of communications involving the wayside data network impacts the ability of PTC to perform. The specific impacts resulting from the inability of the wayside data network to communicate depend upon the particular data or information that is unavailable and the equipment that depends on such information to function. As such, the impacts of communications failures need to be addressed from the perspective of the functional equipment and user.

10.4 OFFICE SUBSYSTEM FAILURES

10.4.1 Failure of One Back Office Server (BOS)

The BOS will be designed with redundancy to provide enhanced availability to perform its functions. Loss of one of the redundant elements should not result in any impact on PTC operation. Maintenance action will need to be taken in a timely manner to ensure a second failure cannot cause the total loss of the BOS functions.

10.4.2 Failure of All BOS Functionality

BOS functionality is limited. The primary function of the BOS is to store data received from the ROCS, the trains and from the Infrastructure Database Management System and Clock System and then to serve that data when requested to the trains, ROCS and adjacent railroads BOS(s) upon request. Queries are made to obtain updated information or to verify that resident information already contained in the trains, ROCS and adjacent BOS equipment is up to date. Much of the data contained on the BOS is safety critical or safety related. However, this data does not change with the same frequency as that obtained from the wayside signal system. The most dynamic safety critical data involves Mandatory Directives that are issued by the Dispatcher. The failure of the BOS impacts operations in a variety of ways. The unavailability of current infrastructure database for verification and update will typically require a manual confirmation that the database stored on the train is up to date. Unavailability of train status data served to the ROCS will reduce the information available to the Dispatcher related to Caltrain PTC equipped operating trains (e.g. detailed train speed, location,

operating mode, station hold status…). Train Station Hold/Release commands will have to be managed by verbal instructions to train(s). Changes to the planned station stop patterns will have to be managed by verbal instructions to the Locomotive Engineer(s). Mandatory Directives that are generated after the failure occurs will have to be conveyed and managed using the conventional means of today.

10.4.3 Failure of the Interface with ROCS

If the interface between the BOS and the ROCS fails, Dispatchers will lose the ability to send new or updated Form Bs etc. to PTC equipped trains. Scheduled station stop and Station Hold/Release functionality will also be lost as well as the availability of train status data for display to the Dispatcher. The other functions of the BOS including upload of the Caltrain PTC territory database to approaching PTC trains should not be affected.

10.5 EIC EQUIPMENT FAILURES

The EIC handheld equipment allows the EIC in the field to introduce train movement restrictions within the limits of the work zone defined in the Form B and to authorize PTC governed train movement through work zones subject to the EIC's defined restrictions without the need to communicate over the voice radio. In the event of a failure of the EIC handheld equipment, the train Engineer will be authorized by the EIC using current procedures. The train Engineer shall typically transition to Block Signal mode and be governed by the temporary speed restriction covering the work zone, unless the EIC instructs the use of Restricted Manual mode and an operating speed of RESTRICTED SPEED or lower. When the train exits the work zone PTC shall enable Supervision mode if conditions support. Rule modifications relating to the use of the EIC equipment are expected.

10.6 EXTENDED CBOSS FAILURES

In the event that PTC failures are extended in terms of duration and that PTC cannot resume in Supervision Mode, the rules and procedures must allow for the Locomotive Engineer to receive permission to use Block Signal mode switch in the cab

The train can proceed on the authority of the SCO and subsequent operation will be in accordance with non CBOSS rules and the wayside signal aspects.

11. PTC IMPACTS ON OPERATIONS, RULES, AND PROCEDURES.

Caltrain operational rules and procedures will be modified to accommodate changes for operation of trains under PTC operating modes. New Rules must be written to govern the procedure for initialization both under full System availability and under partial subsystem failures where manual input is required to confirm the correct track. New Rules are also required to govern the operating mode of PTC that must be used under various conditions including failures of the conventional signal and grade crossing warning systems and of PTC subsystems.

New rules are required for Roadway Workers for the use of handheld terminals in the management of Mandatory Directives.

Modified rules and procedures are required for train operation past wayside signal aspects if PTC operation is different from conventional practice.

Revised procedures are also required for SCO and MCO personnel where new functions and indications are introduced in the dispatch system by the addition of PTC functionality.

Revised procedures and rules will be required for maintenance personnel to troubleshoot and repair PTC related failures and for mechanical staff who will be responsible for the maintenance of vital signal system equipment on-board locomotives and cab cars.

12. INTEROPERABILITY

Interoperability refers to the ability of trains to cross property boundaries under Positive Train Control at territory speed without stopping to reacquire or update movement authorities. This requires communication from the on-board to wayside and from wayside to on-board. It will also require communications between the BOSs of the different railroads.

The Caltrain PTC system is a PTC system which is interoperable as both Host and Tenant with the UP and as Host to tenants Amtrak, Capitol Corridor, and ACE Rail.

All tenants will be equipped with the same or similar on-board equipment as UPRR.

The UP in conjunction with BNSF, CSX and NS is developing the Interoperable Transport Protocol for Interoperability between properties. The Caltrain PTC system will employ this message structure when communicating with tenant trains.

The Caltrain PTC system on-board database will be compliant with the requirements of the Interoperable Train Control (PTC) requirements as being deployed by UP. The requirements include format, degree of accuracy and discrimination.